CONFIDENTIAL PROPRIETARY INFORMATION

Reproductions of this data or the manufacturing of products from this data by anyone other than Spokane Industries, Inc. of Spokane Washington is strictly prohibited without written consent.

SealVac™

SV and SVU Models in 200, 400 & 600 Gallon Sizes

TECHNICAL MANUAL

NSN	PART NUMBER
2330-01-3495	SVU 216
2330-01-3494	SVU 416
2330-01-4213	SVU 616

©COPYRIGHT 2005 By SPOKANE INDUSTRIES INC.

ALL RIGHTS RESERVED

This document discloses subject matter in which Spokane Industries, Inc has Proprietary rights and such subject matter shall not, without the written permission of Spokane Industries, Inc., be either (A) used, released or disclosed in whole or in part outside the government, (B) used in whole or in part by the government, for manufacture, or (C) used by a party other than the government, except for (1) emergency repair or overhaul work only, by or for the government, where the item or process concerned is not otherwise reasonably available to enable timely performance of the work, provided that release of disclosure hereof outside the government shall be made subject to a prohibition against further use, release of disclosure, or (2) release to a foreign government, or for emergency repair or overhaul work by or for such government under the conditions of (1) above. This legend shall be marked on any reproduction hereof in whole or in part.

Spokane Industries, Inc.

Spokane, Washington

SealVac™

ONE YEAR LIMITED WARRANTY

Seller warrants its SealVac™ to be free from defects in material and workmanship under the normal use and service for which the unit is intended if, but only if the unit has been properly operated, maintained and stored in accordance with printed directions contained in the product manual. Our obligation under this Warranty shall be limited to the repair or exchange of SI manufactured equipment and parts which may prove defective within one year of the date the unit is put into service but shall in no event extend beyond a date three years from the date the unit is shipped from our plant. All transportation charges on parts returned to us for replacement under this warranty must be returned prepaid.

Other manufacturers' components warranties apply as their warranty reads.

This warranty does not extend to damage caused be environmental factors varying from normal design conditions, whether natural or man-made, or to units subjected to misuse, negligence or accident. This warranty likewise does not extend to the unit or any parts thereof which have been repaired or altered improperly or in any way so as to effect adversely its stability or reliability. This warranty does not cover parts or labor required to repair or replace parts whose usefulness is exhausted due to normal operation of the unit.

THIS WARRANTY IS EXPRESSLY IN LIEU OF ALL OTHER WARRANTIES, EXPRESSED OR IMPLIED, INCLUDING ANY IMPLIED WARRANTY OF MERCHANTABILITY OR FITNESS FOR A PARTICULAR PURPOSE NOT SET FORTH IN WRITING SIGNED BY AN AUTHORIZED REPRESENTATIVE OR SELLER. SELLER SHALL IN NO EVENT BE LIABLE FOR ANY CONSEQUENTIAL LOSS OR DAMAGE RESULTING FROM THE USE OR LOSS OF USE OF THE UNIT.

Table of Contents

Section		
1.0	Introduction	Page 4
2.0	Safety	Page 5
3.0	Special Tools & Test Equipment	Page 6
4.0	Preparation for Use	Page 7
5.0	Safety Check	Page 7
6.0	Operation	Page 7
7.0	Maintenance	Page 14
8.0	Trouble Shooting	Page 19
9.0	Parts	Page 20

List of Illustrations

Figure		
1.0	SVU Models	Page 21
1.1	SV Models	Page 22
2.0	Funnel Isolation SVU Models	Page 23
2.1	Funnel Isolation SV Models	Page 24
3.0	Font Undercarriage 400 & 600 Gallon Models	Page 25
3.1	Font Undercarriage 200 Gallon Models	Page 26
3.2	Front Undercarriage All Models	Page 27
3.3	Front Undercarriage 400 & 600 Gallon Models	Page 28
3.4	Front Hub Assembly	Page 29
3.5	Front Undercarriage 200 Gallon Models	Page 30
4.0	Rear Undercarriage 400 & 600 Gallon Models	Page 31
4.1	Rear Undercarriage 200 Gallon Models	Page 32
4.2	Rear Axle 400 & 600 Gallon Models	Page 33
4.3	Rear Axle 200 Gallon Models	Page 34
4.4	Brake Assembly	Page 35
4.5	Rear Hub & Drum Assembly	Page 36
4.6	Brake Linkage	Page 37
5.0	Wheel & Tire Ass'y, E-Range, 400 & 600 Gal	Page 38
5.1	Wheel & Tire Ass'y, B-Range, 200 Gal	Page 39
6.0	SVU Vacuum System Ass'y	Page 40
6.1	Primary Vacuum Cover SV & SVU	Page 41
6.2	UDA	Page 42
6.3	UDA Air Manifold	Page 43
6.4	Secondary Vacuum Generator	Page 44
6.5	SV Vacuum System Ass'y	Page 45
6.6	SV Air Manifold	Page 46
7.0	Auto-Vac Shut Off	Page 47

7.1	Level Sensor Ass'y	Page 48
8.0	16' Telescoping Drain	Page 49
8.1	Funnel Section	Page 50
8.2	2 1/2" Telescoping Section	Page 51
8.3	3" Telescoping Section	Page 52
8.4	3 1/2" Telescoping Section	Page 53
8.5	4" Telescoping Section	Page 54
8.6	4" Base Clamp	Page 55
9.0	Cross Arm & Lid Ass'y	Page 56
10.0	Funnel Cover	Page 57
11.0	SealVac™ Standard Suction Plate Ass'y	Page 58
12.0	Contoured Suction PLate Ass'y	Page 59
13.0	Elongated Contoured Suction Plate	Page 60
14.0	Probe & Pigtail Ass'y	Page 61
15.0	De-Fueling Probe	Page 62
16.0	Hose, Probe Pigtail	Page 63
17.0	Shielded Duplex Hose	Page 64
18.0	25' De-Puddling Hose	Page 65
19.0	1 1/4" De-Fueling Hose	Page 66
20.0	Probe Alignment Tool	Page 67

List of Tables

Table		
1.1	Leading Particulars	Page 4
6.1	SealVac™ Controls and Indicators	Pages 9-10
7.1	Inspection and Maintenance	Page 15

Section 1.0 Introduction

1.1 The instructions in this manual cover the specifications, safety, operation, and recommended maintenance of the SealVac™ models SV and SVU 200-400 gallon.

NOTE: Disregard the following on the SV models, any reference to the duplex hoses, plates, probes and secondary vacuum system for parts or operation see 6.3b for operation.

1.2 Purpose

a. The SealVac™ is designed to provide a portable, clean, safe, and efficient fuel tank defueling and depuddling system for the aviation industry

1.3 Description

a. Refer to Figure 1.0 for location and identification of major components. The SealVac™ consists of a tank assembly, a steerable undercarriage, vacuum module, and drain tool assemblies

1.4 Table 1.1

LEADING PARTICULARS	200 GAL	400 GAL	600 GAL
	SV / SVU	SV / SVU	SV / SVU
Length	104" / 104"	116" / 116"	116" / 116"
Width	58-1/4" / 68"	75-1/4" / 82"	75-1/4" / 89"
Height	52" / 54 3/8"	53 1/4" / 56 1/4"	58 1/4" / 61 1/4"
Single Wall Construction			
Weight Full	2475 lbs	4250 lbs	5755 lbs
Weight Empty	1075 lbs	1450 lbs	1555 lbs
Double Wall Construction			
Weight Full	2750 lbs	4498 lbs	6283 lbs
Weight Empty	1350 lbs	1698 lbs	2083 lbs
Environmental Conditions			
Operating temperatures	-2°F to +110°F	-2°F to +110°F	-2°F to +110°F
Tank Capacity	200 Gallons	400 Gallons	600 Gallons
Vacuum Input	60CFM at 100PSI	60CFM at 100PSI	60CFM at 100PSI
Vacuum Output	120CFM at 17"Hg	120CFM at 17"Hg	120CFM at 17"Hg
Hose	1-1/4" x 50'	1-1/4" x 50'	1-1/4" x 50'
Brakes	1-3/4" x 7" drum	1-3/4" x 7" drum	1-3/4" x 7" drum
Tire Size	20.5 x 10 x 8 "B"	20.5 x 10 x 8 "E"	20.5 x 10 x 8 "E"
Tire Inflation	35 PSI Max	90 PSI Max	90 PSI Max
Hitch	Lunette	Lunette	Lunette

Section 2.0 Safety

2.1 Summary

a. This manual contains suggested safety procedures, in addition the end user must comply with all International, Federal, state, local, and company safety and environmental regulation

b. **WARNING** and **CAUTION** statements have been inserted throughout this publication and are essential to the protection of personnel (**WARNING**) or equipment or property (**CAUTION**)

c. Prior to operating this equipment all **WARNINGS** and **CAUTIONS** in this publication must be reviewed and understood

2.2 Definitions

a. **WARNING**: an operation or maintenance procedure that if not observed could result in injury or death to personnel

b. **CAUTION**: an operation or maintenance procedure that if not observed could result in damage or destruction to equipment

2.3 General Safety Precautions

a. This section covers general safety precautions that may or may not be related to any other specific procedures located elsewhere in this manual

b. Cleaners/Chemicals

(1) Some cleaners, chemicals, solvents, fuels, paints, etc. may have adverse effects on eyes, skin and respiration. Observe all manufacturers warnings and read the material safety data sheets (MSDS) to ensure proper handling, storage, and disposal, and safety directives.

c. Confined Space

(1) Personnel that work in a confined space (limited openings for entry and exit) or unfavorable ventilation or space not intended for humans or contains any recognized safety hazards shall comply with all International, Federal, state, local, and company safety and environmental regulations. (Confined space entry permit may be required). Never service or adjust equipment alone. Do not attempt internal service or adjustment of equipment unless another capable person is present to provide rescue in the event of injury.

d. Lifting and Handling

(1) To ensure safety use the proper amount of personnel when lifting or handling equipment

e. Lockout/Tagout

(1) Personnel shall be aware of the hazards associated with equipment, Lockout/Tagout any energy source prior to performing any repairs, adjustments or any procedures that could bypass safety devices. Comply with all International, Federal, state, local, and company safety and environmental regulations.

f.. Finger rings/jewelry

(1) Prior to operating, repairing, or maintaining equipment remove watches rings and jewelry, unless specifically allowed by local procedures

g. Spring loaded mechanisms/cables

(1) Spring loaded mechanisms and cables can cause injury if released or activated in an uncontrolled manner. Always be careful when adjusting or maintaining these devices

h. Personal Protective Equipment (PPE)

(1) Always ensure personnel are equipped with and wear the proper PPE prior to operating, adjusting or maintaining equipment

(2) Comply with all International, Federal, state, local and company safety and environmental regulations

i. Weather Conditions

(1) Use extreme caution operating SealVac™ during adverse weather conditions (ie... ice, snow, rain, strong and gusting winds)

Section 3.0 Special Tools & Test Equipment

3.1 CFM flow meter: P/N #4216K55, 15-150 CFM, 1/2" F-NPT
PSI gauge: P/N #4089K15, 0-150 PSI, 1/4" M-NPT, 2" Dial
Vacuum gauge: P/N #04-0160, 0-30"Hg Digital Vacuum Gauge

Section 4.0 Preparation for Use

4.1 To obtain optimum benefit from your equipment, all personnel operating the SealVac™ receive proper training and understand the contents of manual prior to operation. Pay special attention to the **WARNINGs** and **CAUTIONs** in this manual!

4.2 Upon receipt of the unit, make a visual inspection to determine that it is complete and has not sustained any damage during transportation

4.3 Perform the safety check on this equipment prior to use. Refer to paragraphs 5.1 and 5.2

Section 5.0 Safety Check

5.1 Inspect tires, brakes, undercarriage, tow-bar, valves, hoses, vacuum pumps, fuel quantity-guage prior to use

5.2 Pre-Towing Safety Checks

a) Tires properly inflated
b) Visual check of all tank mounting hardware
c) Visual check of the undercarriage
d) Visual check for any fuel leaks from tank or plumbing
e) All hoses and nozzles, static ground wires, properly stowed
f) All valves and switches in the off position
g) Top manway on tank closed and latched
h) Tow hitch properly secured to towing vehicle
i) Release brakes

CAUTION: Driving the SealVac™ backwards can damage the undercarriage if unit jack knifes

Section 6.0 Operation

6.1 Introduction

a. The instructions contained in this manual provide step-by-step operational procedures. Personnel using this equipment should be trained and familiar with the SealVac™ and this manual prior to equipment operation. Improper operation presents extreme hazards to personnel and equipment.

6.2 General Precautions

a. **WARNING**

(1) Always apply parking brake prior to any fuel servicing operations, maintenance repairs or when the unit is left unattended

(2) Always connect static discharge ground cables to an approved ground prior to performing any fuel servicing

(3) Never leave the unit unattended during defueling operations

(4) Do not allow smoking, sparks, or flames within 50 feet of unit

(5) Maintanin proper ventilation at all times to ensure safe LEL

(6) Prior to any defueling operation, ensure proper venting of the aircraft fuel tanks or fuel cells to prevent possible damage to the aricraft

(7) Exercise care when using the telescoping drain funnel or injury to hands fingers can occure between funnel clamps and sections

(8) Check the supply air pressure to the vaccum generator to ensure it is not in excess of 80 CFM and 110 PSI

(9) Maximum towing speed is 15 MPH

Table 6.1: SealVac™ Controls and Indicators.

Name	***Function***
Tow Bar	*Located at front of unit, swings up (for stowage) and down (attaching to vehicle) for towing (Figure 3.0 & 3.1)*
Brake Lever	*Located on left side of unit, locks and unlocks the rear wheels drum parking brake (Figure 4.0 & 4.1)*
Telescoping Funnel	*Located on top rear of unit, extends aluminum funnel drain to 8'0", 12'0" or 16'0" (depending on model purchased) to allow gravity drain operation (Figure 8.0)*
Manway	*A 16" opening at the top center of the unit that allows access for internal tank inspections or maintenance (Figure 9.0)*
Drain Valve	*Located at the rear bottom of tank, an aluminum camlock for hose connection for tank draining (Figure 2.0 & 2.1)*
Liquid Level Gauge	*Located at top of tank, measures and displays amount of liquid in the tank (figure 1.0 & 1.1)*
Vacuum Relief Valve	*Located on vacuum cover or tank depending on model, provides vacuum relief in excess of 8.0"Hg (Figure 6.0 & 6.5)*
Primary Vacuum Generator	*Located on vacuum cover, provides vacuum to the inside of the tank (Figure 6.0 & 6.5)*
Secondary Vacuum Generators	*2 each, located above the primary vacuum generator, provides vacuum to the vacuum plates (Figure 6.2 & 6.4)*
Vacuum Suction Hose	*Hose for fuel transfer to and from tanks and de-puddling operations (Figure 19.0)*
Static Grounding Reels	*Located on rear of the unit, provides 50' long cable with either a heavy duty clamp or a plug for bonding figure 1.0 & 1.1)*
Sediment Chamber	*Provides a collection point with a removeable screen to collect foreign objects/debrie*
Auto Vacuum Shut Off (AVSO)	*Located in the front of the tank. Equipped with a float and pneumatic shut off switch that turns off the primary vacuum generator when tank reaches the 92% full (figure 7.0 & 7.1)*

Table 6.1: SealVac™ Controls and Indicators. (cont.)

Name	*Function*
Auto Vacuum Shut Off Bypass	*Short-term bypass of Auto Vacuum shut-off system to allow clearing fuel from suction lines (Figure 6.0)*
Standard Vacuum Plate	*Round shaped aluminum plate that attaches to the aircraft and provides a hub in the center for securing the fuel probe. Allows low point de-fueling (Figure 11.0)*
Dual Disk Vacuum Plate	*Two round shaped aluminum plates mounted on a delta wing mount that attaches to the aircraft and provides a hub for securing the fuel probe. Allows low point de-fueling*
Contour Vacuum Plate	*Elliptical shaped aluminum plate that attaches to the aircraft and provides a hub for securing the fuel probe. Allows low point de-fueling on rounded surfaces. (Figure 12.0 & 13.0)*
Fuel Probe Assembly	*Drain tool that fits and locks into vacuum plate hubs. Has a 3'-0" long pigtail with a clear sight window. Various length pins are used with probe to depress the low point drain, accessing tank for defueling. (Figure 14.0, 15.0 & 16.0)*
Shielded Dual Hose Assembly	*35'-0" long dual hose assembly that provides vacuum for the vacuum plate and fuel probe (Figure 17.0)*
De-Puddling Hose	*25'-0" long hose 1/2" ID has an open end for de-puddling (Figure 18.0)*
Probe Alignment Tool	*Used to help align the vacuum plates so that the probe is centered (figure 20.0)*

6.3A SealVac™ Operational Checklist

NOTE: These are general instructions that are recommended for proper operation of the SealVac™ and in no way over-rides local policies and directives

CAUTION: Before any operation of the SealVac™ ensure you are familiar with its features. Review the operator's manual to familiarize yourself with all sections. Operate within applicable guidelines according to manufacturer's recommendations and local directives and policies.

WARNING: Never leave the SealVac™ unattended during any operation. You must stay vigilant for possible malfunctions, overfill and other emergency situations.

WARNING: SealVac™ unit must be grounded to the aircraft and single-point grounded with aircraft ground unless local procedures specifiy otherwise

CAUTION: Comply with all safety precautions and PPE requirements directed by local policies/ procedures

CAUTION: Ensure aircraft tank vent system is operational and free of obstructions

CAUTION: Do not override the SealVac™ fuel drain systems' overflow protection system except to clear line per SealVac™ checklist for SVU Model.

a. SealVac™ Checklist

1. Ensure unit is serviceable by performing a daily inspection
2. Check to see if there is sufficient room to perform de-fueling task
3. Properly prepare and ground aircraft according to procedures/directions
4. Position unit to allow access to tank sump/sumps for bottom draining
5. Set parking brake and wheel chock if necessary
6. Properly ground unit, connect one of the two ground cables on the unit to the aircraft and the other single point grounded with the aircraft ground
7. Connect an appropriate air source to the SealVac™ Fuel drain system

NOTE: Appropriate air source must be regulated air, with a recommended 60 CFM and 100 PSI for optimum performance

8. Turn on primary vacuum generator (Figure 6.3 item 19)
9. Turn on one or both secondary vacuum generators (Figure 6.3 item 13)
10. Connect appropriate vacuum suction plate and pigtail (Figure 11.0, 12.0 or 13.0) to the shielded duplex hose (Figure 17.0)
11. Attach hose hangar/lanyard to hose
12. Open ½" fuel vacuum line valve (Figure 6.0 item 4)

a. Check for vacuum at probe and suction plate
b. Lubricate seals on vacuum suction plate and fuel probe
c. Make sure correct pin is in place. NOTE: See pin selection procedure in manual

13 Stretch out shielded duplex hose
14 Attach hose lanyard to appropriate support structure

15 Attach proper vacuum suction plate to skin of aircraft over sump and actuate suction
a. Center fuel probe hub over tank sump fitting, either by sight or using the aligning tool, see figure 20.0
b. apply slight pressure to plate
c. move slide valve towards vacuum suction plate and vacuum seal plate to aircraft skin

16 a. Ensure probe packing seal is lubricated with petroleum
b. Insert probe into vacuum plate, by lining up index marking on probe to index marking on plate, rotate clockwise 90°

17 Look at sight window to make sure fuel is flowing. Note: If no fuel check for pin and proper length, check for fuel in the aircraft tank, then see trouble shooting section in manual

NOTE: If SealVac™ becomes full before aircraft tank is bottom drained and autovac system shuts (AVSO) the SealVac™ down then complete the following: 2 people are required. One person will partially remove probe (sump disengaged and probe still in vacuum plate) the other person will depress over-ride button on the AVSO and turn on primary vacuum generator to clear line of fuel. Failure to accomplish task will cause possible fuel exposure and airlock in hose.

18 When fuel stops flowing clear suction plate and hose of residual fuel by
a. Depressing & holding bleeder valve, see figure 15.0 item 3
b. Rotating probe 90° counter clockwise, slightly pulling probe down ¼", letting line clear (approx 5 seconds) then remove probe.

19 Pull down slide valve and release vacuum suction plate
20 Clean aircraft skin with rag around fuel sump and suction plate area wiping away any residual fuel and or lubricant from seals. Check sump drain for flushness and proper seal
21 Disconnect hose hangar/lanyard from support structure
22 Walk hoses and vacuum suction plate back to SealVac™
23 Make sure fuel vacuum line is clear of any residual fuel
24 Turn off primary and secondary vacuum valves
25 Disconnect fuel probe and vacuum suction plate and store in storage boxes
26 Wrap duplex hose on hangars
27 Disconnect ground cables
28 Release parking brake
29 Tow back to parking place

6.3 B SealVac™ Checklist for SV Model

1. Ensure unit is serviceable by performing a daily inspection.
2. Check to see if there is sufficient room to perform de-fueling task
3. Properly prepare and ground aircraft according to procedures/directions
4. Position unit to allow access to tank sump/sumps for bottom draining
5. Set parking brake and wheel chock if necessary
6. Properly ground unit, connect one of the two ground cables on the unit to the aircraft and the other single point grounded with the aircraft ground
7. Connect an appropriate air source to the SealVac™ Fuel drain system.

NOTE: Appropriate air source must be regulated air, with a recommended 60 CFM and 100 PSI for optimum performance

8. Turn on primary vacuum generator (Figure 6.6 item 13)
9. When finished with de-puddling clear line
10. Walk hose back to SealVac™
11. Turn off primary vacuum
12. Stow hose
13. Disconnect ground cables
14. Release parking brake
15. Tow back to parking place

6.4 Gravity Draining and Operation of Telescoping Funnel: See Figure 8.0

CAUTION: Failure to open funnel isolation valve when gravity draining prior to use will cause fuel spill. (Figure 2.0 & 2.1)

a. Some units are equipped with a telescoping funnel assembly that is capable of being adjusted up to 8'0", 12'0" or 16'0" depending on model purchased

b. To Raise

1) Loosen top clamp if necessary
2) Grasp top section with one hand and lift until the top clamp raises approximately 6 to 24 inches
3) Tighten clamp securely with the other hand
4) Reposition lifting hand by grasping tube below tightened clamp and lift until next clamp raises 6 to 24 inches
5) Repeat Steps 1-4 to desired height or fully extended

c. To Lower

1) Tightly grasp bottom extended tube with one hand and loosen the securing clamp.
2) Slowly lower tube, hand over hand, until the following clamp is resting on the loosened clamp
3) Repeat steps 1 and 2 until all sections are lowered

NOTE: If the funnel isolation valve is open there will be a loss of vacuum in the tank and cause poor performance of unit

7.0 Maintenance

7.1 Operational Checkout

a. Operational checkout is performed during the course of normal operation. If the unit operates normally, it may be assumed that no repair is required. However, the following preventive maintenance procedures may be performed at regular intervals or in accordance with standard shop procedures.

7.2 Inspection and Preventive Maintenance

a. Prior to each day's use, determine that the unit is in serviceable condition by inspecting it for any obvious damage, distortion, corrosion, loose or missing parts. Make all necessary repairs accordingly.

b. Check the tire inflation pressure. Maintain tire pressure as listed on tire

c. Check tires for cuts, excessive wear or for objects that become wedged within the tread. Replace tires that are unserviceable

d. Check for leaks

e. Refer to Table 7.1 for periodic inspection and maintenance

7.3 Cleaning. Cleaning is accomplished as follows

a. Clean metal surfaces with a clean rag and approved cleaning agents

b. Wipe surface dry with clean absorbent rag. Do not allow solvent to dry on surface

c. If required, repeat application of cleaning agent to produce a soil free surface

WARNING: Steam or vapor pressure cleaning creates hazardous noise levels and severe burn and eye injury potential. Eye, skin and ear protection required

d. Steam clean interior of unit to remove all fuel residue

7.4 Lubrication

a. Grease brake linkage and zerks every 6 months

Table 7.1 **Recommended 6 month interval inspection and maintenance**:

Clean entire inside and outside of unit using steam cleaning and approved cleaning products

Chassis and frame:	Check for cracks, loose or missing hardware
Tow bar and steering components:	Check for cracks, loose or missing hardware, excessive wear and proper alignment and operation
Tires:	Check for cuts, breaks, bumps, bulges and exposed tire cord, ensure they are properly inflated and no air leaks
Brakes:	Check for loose or missing hardware security and proper operation and rigging
Tank:	Check for cracked welds, leaks and loose or missing hardware. Open manway and clean out any debris inside of tank
Static grounding reels:	Check condition of reel and cable for loose or missing hardware, loose connections and check electrical resistance of cable between chassis and clip. Max resistance 10 Ohms
Sediment Chamber:	Check hinges, cover and locking device for cracks and proper operation and loose or missing hardware. Remove lid and clean out any debris
Vacuum system:	Check for proper operation, leaks, security, loose or missing hardware
Drain and isolation valves:	Check for proper operation and security, loose or missing hardware
Hose Assemblies:	Check condition and evidence of leaks, loose or missing hardware
Seal, gaskets:	Check condition and replace as necessary
Vacuum plates and fuel probes:	Check condition of plates and seals, proper operation of check valves and lubricate seals with petroleum
Primary vacuum generator:	Clean filter and check for loose and missing hardware
Secondary vacuum generator:	Check for loose or missing hardware. Check condition of generator and ensure silencer is attached
Brake linkage:	Grease brake linkage and zerks
Every two years:	
Wheel bearings:	Clean, inspect and repack with specified lubricant

7.5 Repair

a. The following procedures are for the disasssembly, repair and reassembly of the various component groups. Perform only steps necessary to effect the desired repairs.

WARNING: Be certain the parking brake is applied and/or the wheels are chocked to prevent movement prior to performing repair procedures.

7.6 Parking Brake (Figures 4.0, 4.1, 4.4, 4.5, & 4.6)

a. The unit is equipped with a parking brake assembly consisting of a 7" diameter brake drum with 1-3/4" wide brake shoes

b. The shoes are activated via a mechanical linkage, eccentric and lever

c. Adjustment may be necessary as the shoes wear

(1) Tighten by removing the bolt from one yoke and screwing yoke in to shorten connecting rod.
(2) Do not over tighten or brakes my drag when released

d. Replacement of shoes

(1) Remove wheel
(2) Remove nut retaining hub and drum assembly
(3) Disconnect actuating rod
(4) Remove shoe retainers
(5) Install new shoes
(6) Replace shoe reatiners
(7) Adjust actuator rod length
(8) Replace wheel

7.8 Under Carriage and Tow Bar: See Figure 3.0

a. The unit is equipped with steerable front wheels, fixed rear wheels, and a tow bar

b. Maintenance consists of the following

(1) King pin bushing, turning bushings and tie rod ends are self lubricating and need no additional maintenance
(2) Pack wheel bearing every 2 years

c. Tow bar pivot pin and lunette eye hook ring should be inspected every 6 months for excessive wear or cracks.

7.8 Telescoping Funnel Assembly (Figure 8.0)

a. The telescoping funnel consists of stainless steel housing permanently attached to the tank and multiple tube sections

b. The stainless tube and four largest aluminum tubes are equipped with a clamp assembly

c. Each aluminum tube is crimped on the lower end which acts as a stop to prevent the tube from sliding through the clamp

d. Disassembling of the telescoping funnel is accomplished by rotating the four sections 180 degrees from normal position and gently lifting each section so that the crimped edge on the tube is aligned with the slot on the clamp

7.9 Vacuum Assembly (Figure 6.0 & 6.5)

SV & SVU

a. The vacuum assembly is held in place by three latches

b. Vacuum generators are equipped with a filtered exhaust silencer which should be cleaned at six month intervals or more often depending on useage. Wash with soap and water

c. Check both inner and (SVU Models Only) outer suction plate seals prior to each use. Replace if any cracks or deformation is visible

d. Check the "O-Ring" seal on the SealVac™ fuel probe prior to each use. Replace if any cracks or deformation is visible

e. Check probe tips to ensure that they are not bent or damaged. Replace as required

f. Check all components regularly

7.10 Grounding Reels (Figure 1.0 item 9 & 1.1)

a. Grounding reel cables should be pulled out, cleaned and inspected monthly

b. Cable clamps and ends should be inspected for loose connections monthly

7.11 Fluid Level Indicator (Figure 1.0 item 10 & 1.1)

a. Inspect for loose fasteners and weathering

7.12 Vacuum Manway (Figure 9.0)

a. Inspect the manway gasket every 6 months for cuts, cracks and galling. Replace as needed

CAUTION: The governor must not be adjusted outside of the designed operating range. To do so may damage the tank. Improper adjustments will nullify the factory warranty.

7.13 Vacuum Governor (Figure 6.0)

a. The vacuum governor has been preset at the factory and should need no further adjustments

b. Should adjustments be required

(1) On SV Models a 1/2" nipple on the lid of the sediment chamber is provided for the attachment of the vacuum gauge

(2) On SVU Models the vacuum gauge P/N 04-1060 is attached to a 1/2" tee attached to the 1/2" nipple on the sediment chamber lid

CAUTION: Governor should never be set above 7.8"Hg

(3) The air supply must be started from 0 pressure and slowly opened while simultaneously adjusting the vacuum governor until you reach the desired operating range

8.0 Trouble Shooting

SYMPTOM	PROBABLE CAUSE	PROBABLE CORRECTIONS
the unit does not track or steer correctly or steers loosely	bent king pin housing	replace king pin housing
	defective tie rod end	replace tie rod end
	loose or worn out bushings	replace as needed
tow bar does not stay in the upright position	broken or stretched spring	replace as needed
parking brake does not work	needs adjustment	adjust as per instructions in sections 7.7
loss of vacuum	vacuum lid seal leak	replace as needed
	not enough air pressure to operate generator	increase air pressure and volume
	plugged exhaust silencer	replace or clean as required
	funnel isolation valve is not closed	shut off valve
telescoping funnel will not stay up	loose clamp handles	tighten handles a little tighter
	bent tube section	replace as required
telescoping drain is over flowing	tank is full	empty main tank
	clogged screen or stainer	remove and clean as required
	funnel isolation valve is closed	open valve
suction plate will not attach to aircraft	secondary vacuum not turned on	turn on secondary vacuum
	air leaks	make sure all connections are tight, seals lubricated and in good condition
low fuel flow	"see loss of vacuum"	
	1/2" valve not open	open valve
	probe tip too short	try a longer tip
	other valves open	make sure all valves not in use are closed
	air lock in duplex hose	clear lines before each use

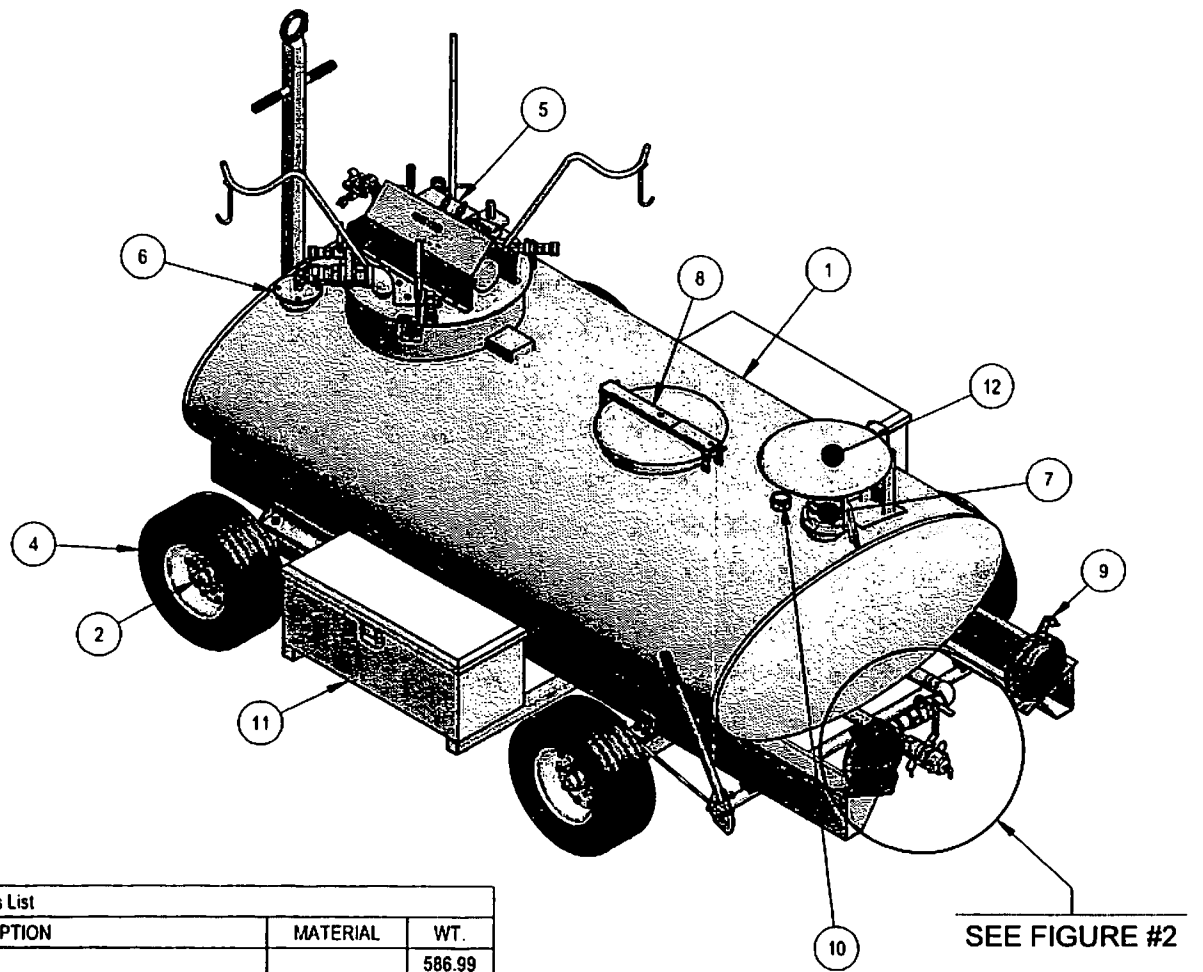

Parts List

ITEM	QTY	P.N.	DESCRIPTION	MATERIAL	WT.
1	1	07-2279	TANK WELDMENT		586.99
2	1	08-1018	FRONT UNDERCARRIAGE SEE FIGURE #3		182.04
3	1	08-10102	REAR UNDERCARRIAGE SEE FIGURE #4		125.43
4	4	07-10201	WHEEL, TIRE, AND TUBE ASSEMBLY SEE FIGURE #5		30.58
5	1	08-1000U	SVU VACUUM SYSTEM ASSEMBLY SEE FIGURE #6		73.67
6	1	08-1802	AUTO-VAC SHUT-OFF ASSEMBLY SEE FIGURE #7		2.96
7	1	08-1034U	16' TELESCOPING FUNNEL SEE FIGURE #8		21.92
8	1	08-10251	CROSS ARM & LID ASSEMBLY SEE FIGURE #9		15.68
9	2	04-1036	GROUNDING REEL		9.39
10	1	04-01540	LEVEL GAUGE		.08
11	2	04-0030	STORAGE BOX		12.66
12	1	08-10261	FUNNEL COVER SEE FIGURE #10		7.81

SPOKANE INDUSTRIES PO Box 3303 Spokane, WA. 99220 800-541-3601

Tolerance:except as noted
x/x= 1/8"
.xx= .03"
.xxx= .005"
ANG= 1

SVU MODELS

FIG. #1

Drawn: jay | Date:10/11/2005 | Size: A | Scale: NTS | Sheet 1 of 1

Confidential - Proprietary Information. Reproduction of these drawings or the manufacturing of products from these drawings for use by anyone other than Spokane Metal Products of Spokane, WA. is prohibited without written consent.

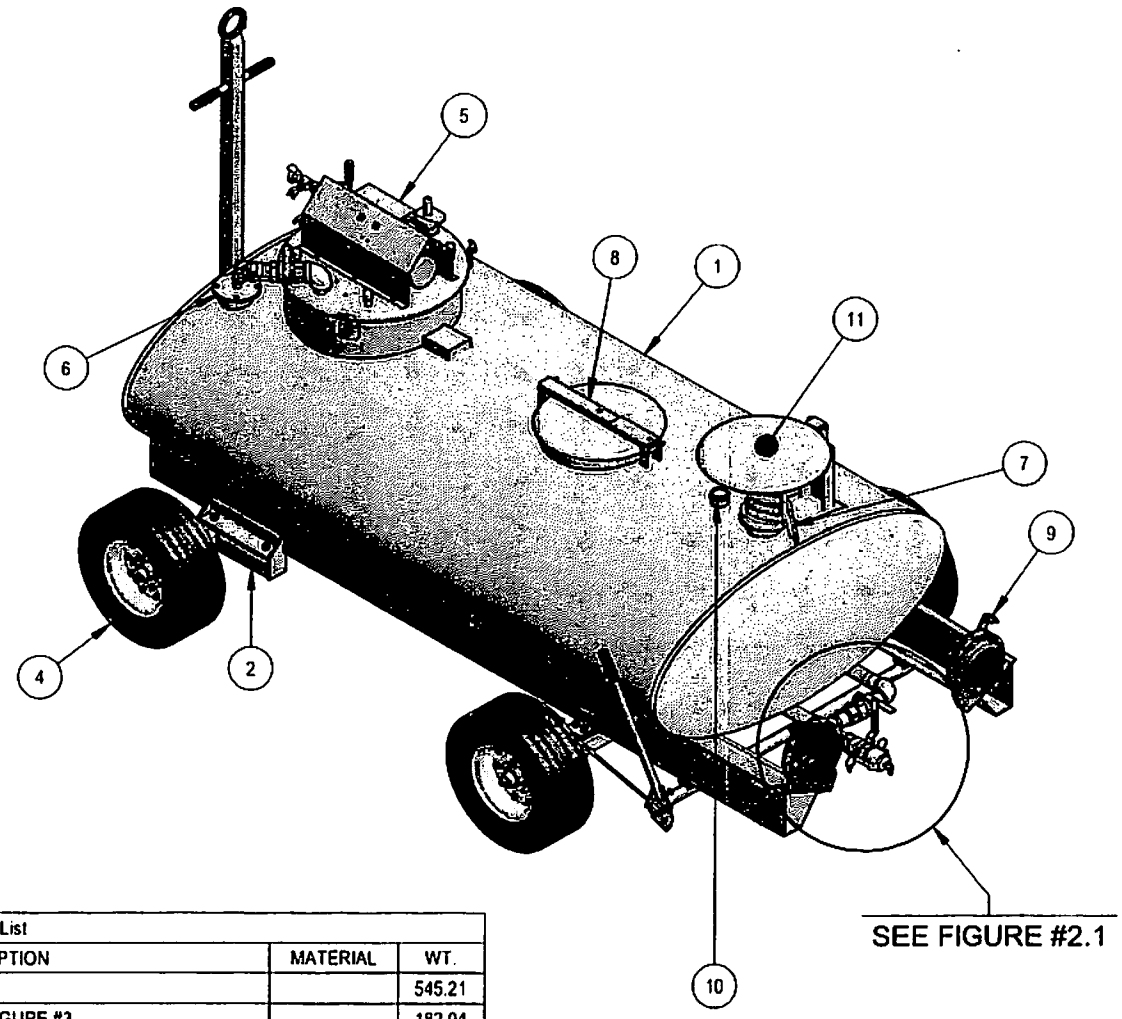

Parts List

ITEM	QTY	P.N.	DESCRIPTION	MATERIAL	WT.
1	1	07-2278	TANK WELDMENT		545.21
2	1	08-1018	FRONT UNDERCARRIAGE SEE FIGURE #3		182.04
3	1	08-10102	REAR UNDERCARRIAGE SEE FIGURE #4		125.43
4	4	07-10201	WHEEL, TIRE, AND TUBE ASSEMBLY SEE FIGURE #5		30.58
5	1	08-1000	SV VACUUM SYSTEM ASSEMBLY SEE FIGURE # 6.5		53.42
6	1	08-1802	AUTO-VAC SHUT-OFF ASSEMBLY SEE FIGURE #7		2.96
7	1	08-1034U	16' TELESCOPING FUNNEL SEE FIGURE #8		21.92
8	1	08-10251	CROSS ARM & LID ASSEMBLY SEE FIGURE #9		15.68
9	2	04-1036	GROUNDING REEL		9.39
10	1	04-01540	LEVEL GAUGE		.08
11	1	08-10261	FUNNEL COVER SEE FIGURE #10		7.81

SPOKANE INDUSTRIES PO Box 3303 Spokane, WA. 99220 800-541-3601

Tolerance:except as noted
x/x= 1/8"
.xx= .03"
.xxx= .005"
ANG= 1

SV MODELS

FIG. #1.1

Drawn: jay | Date:11/3/2005 | Size: A | Scale: NTS | Sheet 1 of 1

Confidential - Proprietary Information. Reproduction of these drawings or the manufacturing of products from these drawings for use by anyone other than Spokane Metal Products of Spokane, WA. is prohibited without written consent.

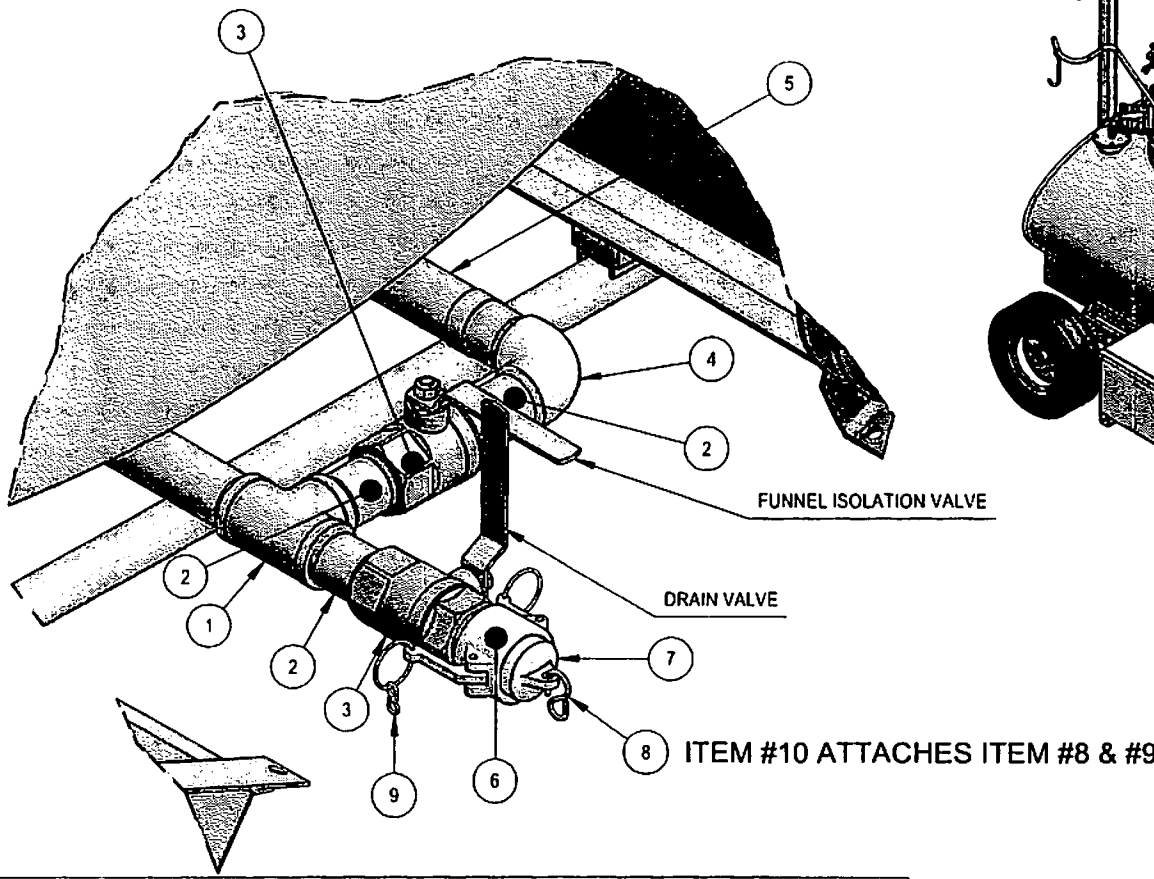

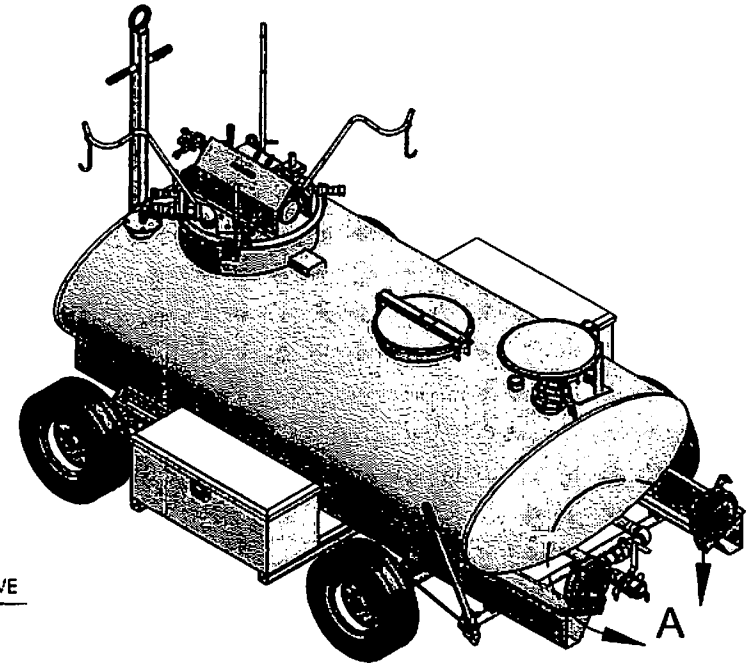

Parts List					
ITEM	QTY	P.N.	DESCRIPTION	MATERIAL	WT.
1	1	03-10074	1 1/2" THREADED TEE	Stainless Steel	2.09
2	3	03-02921S	1 1/2" NIPPLE 3" LG.	Stainless Steel	.67
3	2	04-10321	BALL VALVE, 1 1/2"	Brass	3.60
4	1	03-10014	1 1/2" THREADED ELBOW	Stainless Steel	1.42
5	1	06-10164	1 1/2" FLEX HOSE ASSEMBLY	Stainless Steel	4.04
6	1	04-1033	1 1/2" CAMLOCK	Aluminum	.72
7	1	04-10331	CAM-LOCK PLUG	Aluminum	.35
8	1	04-10351	S-HOOK	Steel, Mild	.02
9	1	04-1035	S-HOOK	Steel, Mild	.01
10	1	04-1034	SASH CHAIN	Steel, Mild	.07

SPOKANE INDUSTRIES PO Box 3303 Spokane, WA. 99220 800-541-3601

Tolerance:except as noted
x/x= 1/8"
.xx= .03"
.xxx= .005"
ANG= 1

FUNNEL ISOLATION
SVU MODELS

FIG. #2

Drawn: jay | Date:9/22/2005 | Size: A | Scale: NTS | Sheet 1 of 1

Confidential - Proprietary Information. Reproduction of these drawings or the manufacturing of products from these drawings for use by anyone other than Spokane Metal Products of Spokane, WA. is prohibited without written consent.

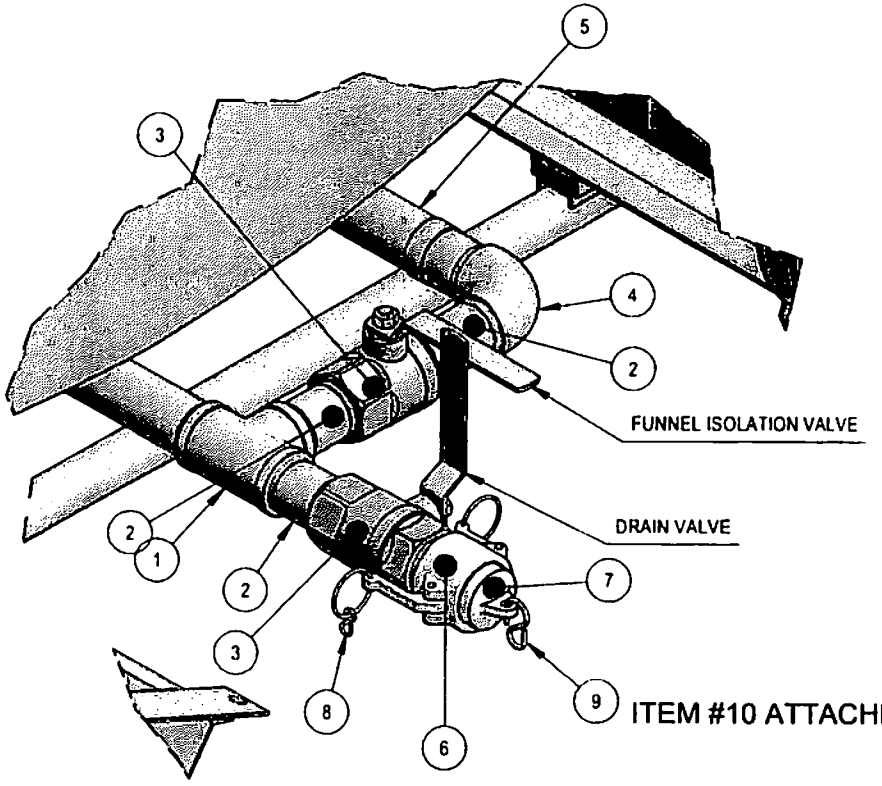

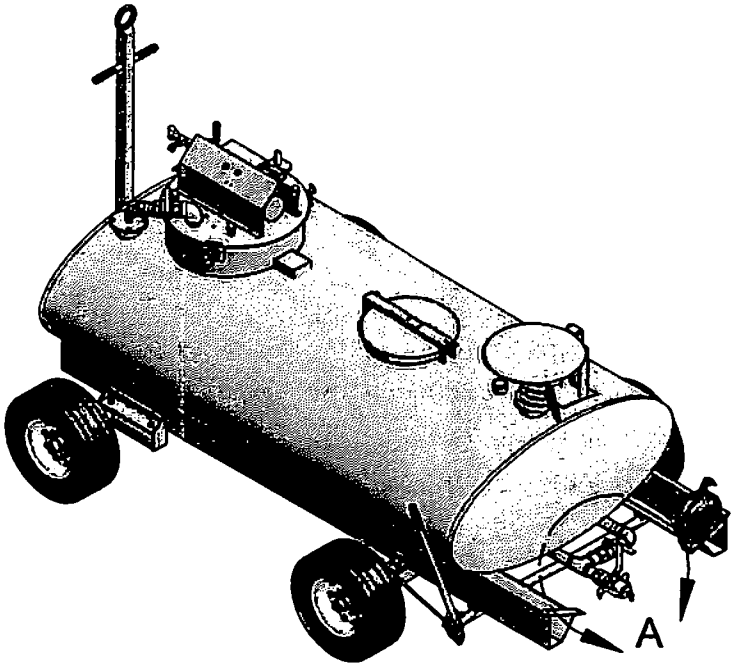

Parts List

ITEM	QTY	P.N.	DESCRIPTION	MATERIAL	WT.
1	1	03-10074	1 1/2" THREADED TEE	Stainless Steel	2.09
2	3	03-02921S	1 1/2" NIPPLE 3" LG.	Stainless Steel	.67
3	2	04-10321	BALL VALVE, 1 1/2"		3.60
4	1	03-10014	1 1/2" THREADED ELBOW	Stainless Steel	1.42
5	1	06-10164	1 1/2" FLEX HOSE ASSEMBLY	Stainless Steel	4.04
6	1	04-1033	1 1/2" CAMLOCK	Aluminum	.72
7	1	04-10331	CAM-LOCK PLUG	Aluminum	.35
8	1	04-1035	S-HOOK	Steel, Mild	.01
9	1	04-10351	S-HOOK	Steel, Mild	.02
10	1	04-1034	SASH CHAIN	Steel, Mild	.07

SPOKANE INDUSTRIES PO Box 3303 Spokane, WA. 99220 800-541-3601

Tolerance:except as noted
x/x= 1/8"
.xx= .03"
.xxx= .005"
ANG= 1

FUNNEL ISOLATION
SV MODELS

FIG. #2.1

Drawn: jay | Date:11/3/2005 | Size: A | Scale: NTS | Sheet 1 of 1

Confidential - Proprietary Information. Reproduction of these drawings or the manufacturing of products from these drawings for use by anyone other than Spokane Metal Products of Spokane, WA. is prohibited without written consent.

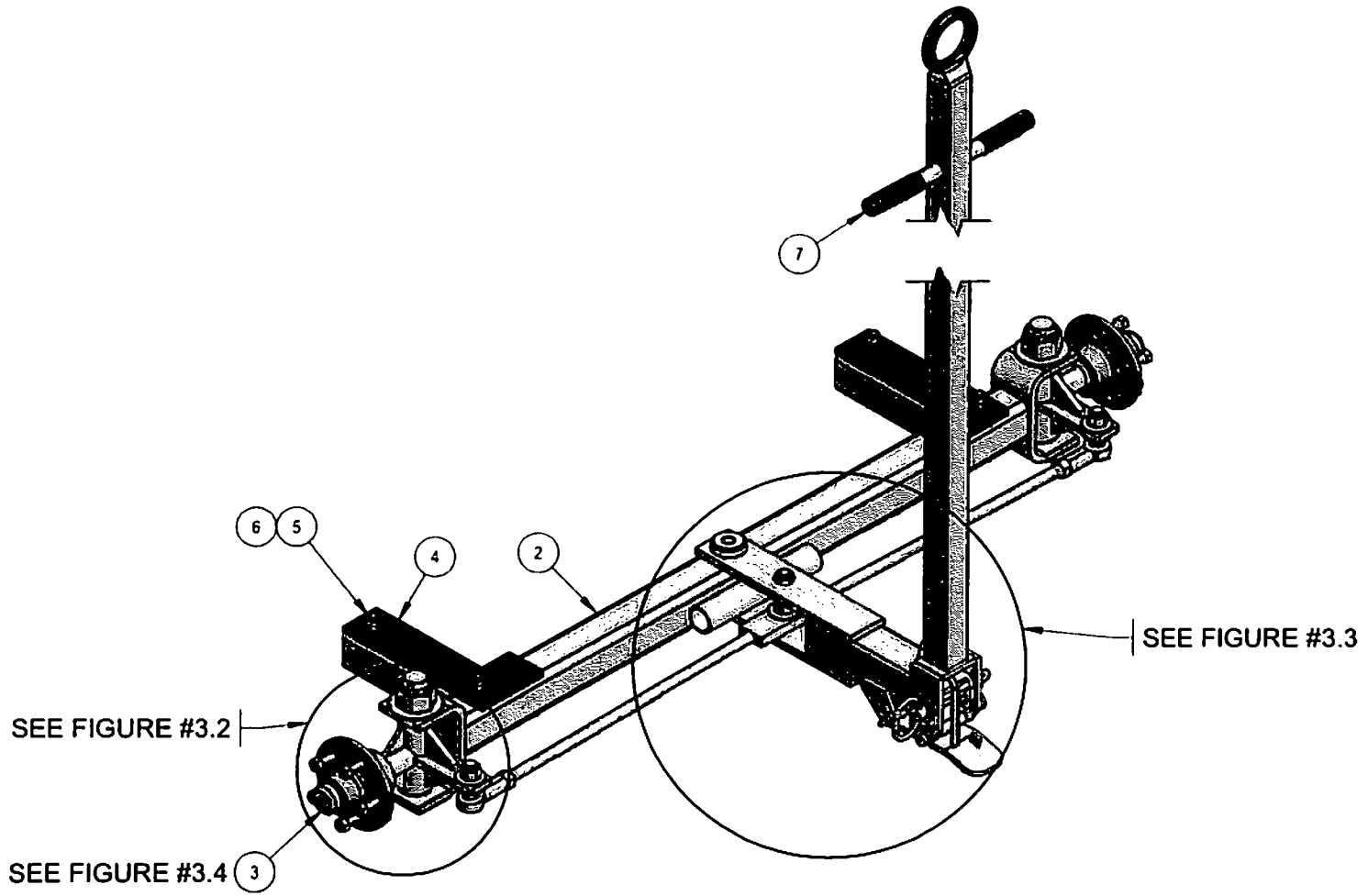

Parts List

ITEM	QTY	P.N.	DESCRIPTION	MATERIAL	WT.
1	1	07-1103	TOW BAR		21.65
2	1	07-11071	FRONT AXLE		67.95
3	2	08-1011	FRONT HUB ASSEMBLY		8.62
4	2	06-1023	PAD, MOUNTING	Rubber	.75
5	4	02-1503	HEX BOLT, 1/2" UNC x 4 1/2" LG.	Steel, Mild	.31
6	4	02-12041	NUT, NYLON INSERT, 1/2" UNC	Steel, Mild	.05
7	2	04-1055	HAND GRIP	Rubber	.05

SPOKANE INDUSTRIES PO Box 3303 Spokane, WA. 99220 800-541-3601

Tolerance:except as noted
x/x= 1/8"
.xx= .03"
.xxx= .005"
ANG= 1

FRONT UNDERCARRIAGE
400 & 600 GALLON MODELS

PN: 08-1018 | FIG. #3

Drawn: jay | Date:11/30/2004 | Size: A | Scale: NTS | Sheet 1 of 3

Confidential - Proprietary Information. Reproduction of these drawings or the manufacturing of products from these drawings for use by anyone other than Spokane Metal Products of Spokane, WA. is prohibited without written consent.

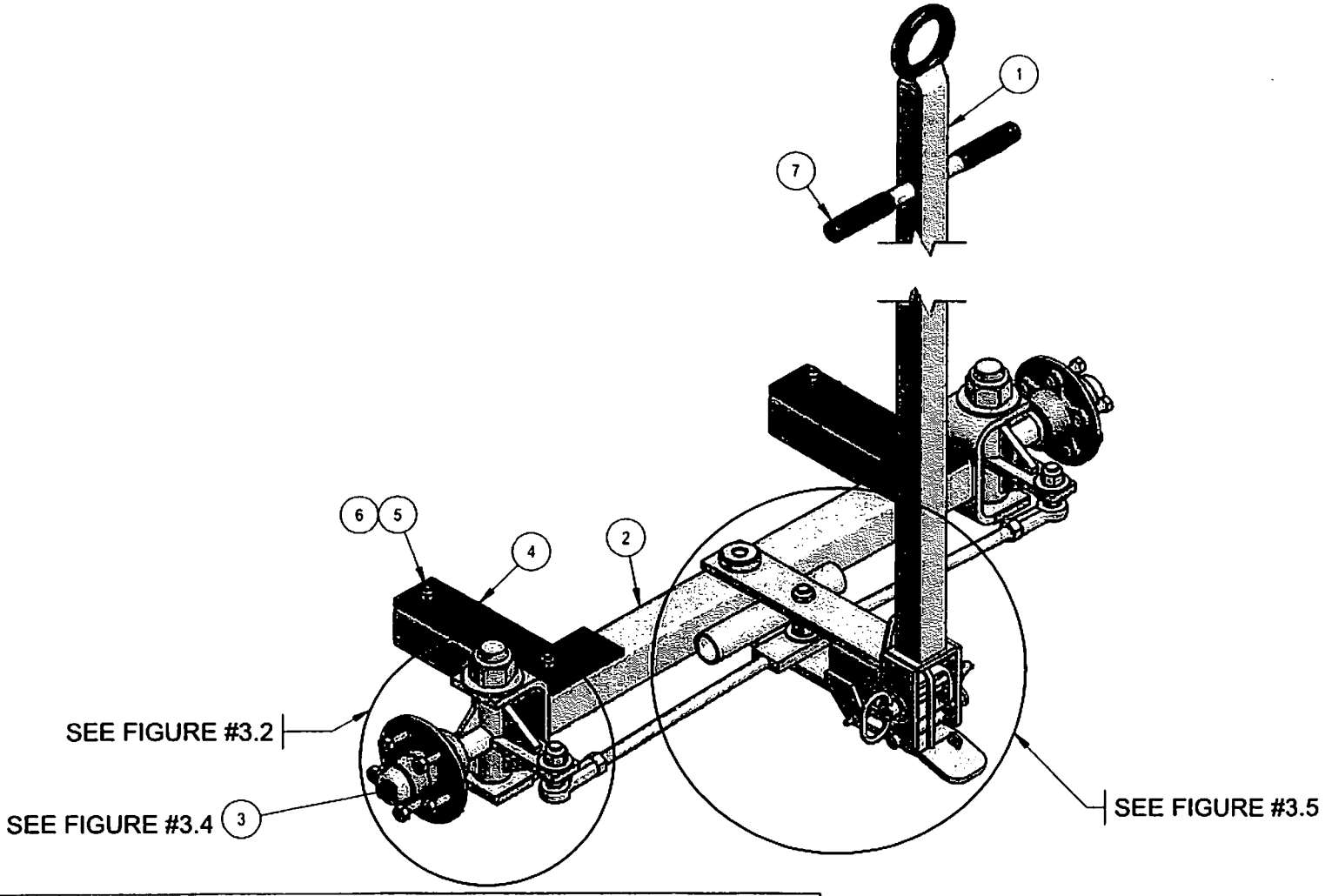

Parts List

ITEM	QTY	P.N.	DESCRIPTION	MATERIAL	WT.
1	1	07-1103	TOW BAR		21.65
2	1	07-1053	FRONT AXLE		55.45
3	2	08-1011	FRONT HUB ASSEMBLY		8.62
4	2	06-1023	PAD, MOUNTING	Rubber	.75
5	4	02-1503	HEX BOLT, 1/2" UNC x 4 1/2" LG.	Steel, Mild	.31
6	4	02-12041	NUT, NYLON INSERT, 1/2" UNC	Steel, Mild	.05
7	2	04-1055	HAND GRIP	Rubber	.05

SPOKANE INDUSTRIES PO Box 3303 Spokane, WA. 99220 800-541-3601

Tolerance:except as noted
x/x= 1/8"
.xx= .03"
.xxx= .005"
ANG= 1

FRONT UNDERCARRIAGE
200 GALLON MODELS

PN: 08-1029R1 | FIG. #3.1

Drawn: jay | Date:11/9/2005 | Size: A | Scale: NTS | Sheet 1 of 2

Confidential - Proprietary Information. Reproduction of these drawings or the manufacturing of products from these drawings for use by anyone other than Spokane Metal Products of Spokane, WA. is prohibited without written consent.

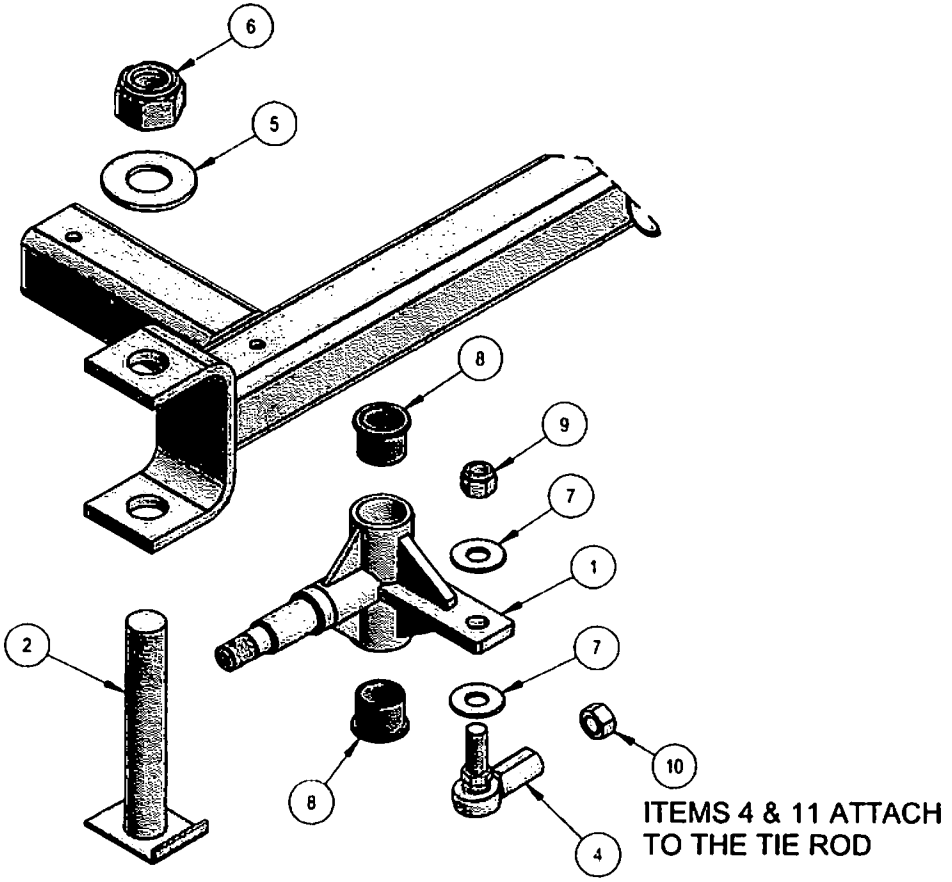

Parts List

ITEM	QTY	P.N.	DESCRIPTION	MATERIAL	WT.
1	1	07-1009	HOUSING, KING PIN		8.17
2	1	07-10105	KING PIN		5.24
4	1	03-1016	ROD END, BALL JOINT		1.32
5	1	02-11131	WASHER, FLAT	Steel, Mild	.43
6	1	02-12131	NUT, NYLON INSERT	Steel, Mild	1.21
7	2	02-11072	FLATWASHER	Steel, Mild	.10
8	2	03-1013	BUSHING, KING PIN	Bronze	.36
9	1	02-12071	NUT, NYLON INSERT, 3/4-16 UNF	Steel, Mild	.17
10	1	02-12141	NUT, 3/4-16 UNF	Steel, Mild	.13

SPOKANE INDUSTRIES PO Box 3303 Spokane, WA. 99220 800-541-3601

Tolerance:except as noted
x/x= 1/8"
.xx= .03"
.xxx= .005"
ANG= 1

FRONT UNDERCARRIAGE
ALL MODELS

PN: 08-1018 & 08-1029R1 | FIG. #3.2

Drawn: jay | Date:11/30/2004 | Size: A | Scale: NTS | Sheet 2 of 3

Confidential - Proprietary Information. Reproduction of these drawings or the manufacturing of products from these drawings for use by anyone other than Spokane Metal Products of Spokane, WA. is prohibited without written consent.

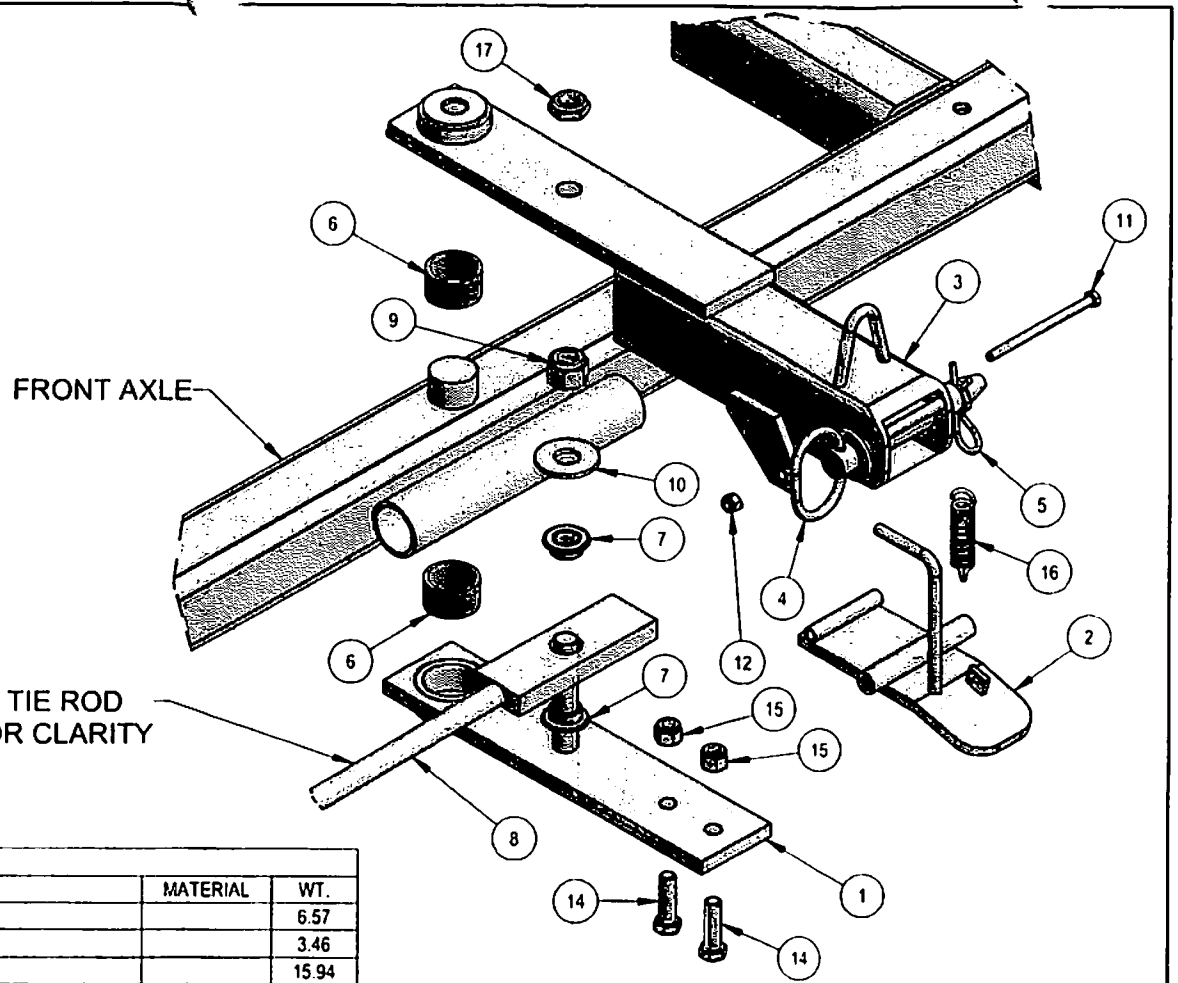

Parts List

ITEM	QTY	P.N.	DESCRIPTION	MATERIAL	WT.
1	1	07-1016	STEERING ARM, LOWER PLATE		6.57
2	1	07-1020	TOE LATCH		3.46
3	1	07-1104	STEERING ARM		15.94
4	1	02-1304	HITCH PIN	Steel, Mild	1.59
5	1	02-1300	PIN, COTTER	Steel, Mild	.06
6	2	03-1014	BUSHING, STEERING ARM	Bronze	.21
7	2	03-1015	BUSHING, TIE ROD	Bronze	.09
8	1	07-1005	TIE ROD	Steel, Mild	5
9	1	02-12071	NUT, NYLON INSERT, 3/4-16 UNF	Steel, Mild	.17
10	1	02-11072	FLATWASHER	Steel, Mild	.10
11	1	02-1501	HEX BOLT, 5/16-18 x 4 1/2" LG.	Steel, Mild	.11
12	1	02-1201	NUT, NYLON INSERT, 5/16-18	Steel, Mild	.02
14	2	02-1502	BOLT, 1/2-13 x 1 3/4" LG.	Steel, Mild	.14
15	2	02-12041	NUT, NYLON INSERT, 1/2" UNC	Steel, Mild	.06
16	1	04-1054	SPRING	Steel, Mild	.12
17	1	02-1207	JAM NUT, NYLON INSERT, 3/4-16 UNF	Steel, Mild	.08

SPOKANE INDUSTRIES
PO Box 3303 Spokane, WA. 99220 800-541-3601

Tolerance:except as noted
x/x= 1/8"
.xx= .03"
.xxx= .005"
ANG= 1

FRONT UNDERCARRIAGE
400 & 600 GALLON MODELS

PN: 08-1018 | FIG. #3.3

Drawn: jay | Date:11/30/2004 | Size: A | Scale: NTS | Sheet 3 of 3

Confidential - Proprietary Information. Reproduction of these drawings or the manufacturing of products from these drawings for use by anyone other than Spokane Metal Products of Spokane, WA. is prohibited without written consent.

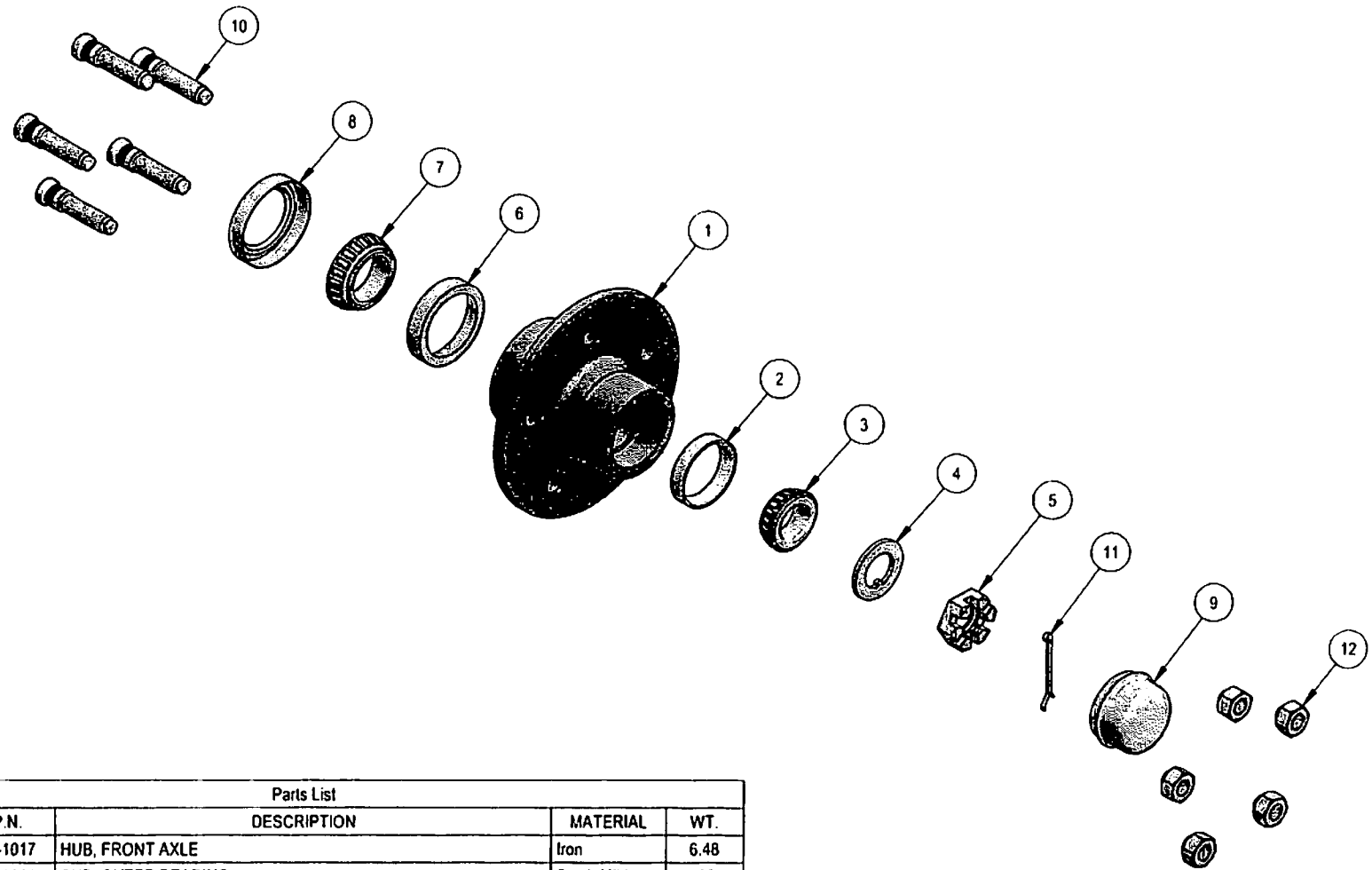

Parts List

ITEM	QTY	P.N.	DESCRIPTION	MATERIAL	WT.
1	1	04-1017	HUB, FRONT AXLE	Iron	6.48
2	1	04-1016	CUP, OUTER BEARING	Steel, Mild	.08
3	1	04-1014	CONE, OUTER BEARING	Steel, Mild	.17
4	1	02-12055	WASHER	Steel, Mild	.05
5	1	02-1205	NUT, CASTLE	Steel, Mild	.16
6	1	04-1015	CUP, INNER BEARING	Steel, Mild	.18
7	1	04-1013	CONE, INNER BEARING	Steel, Mild	.24
8	1	04-1012	SEAL, BEARING	Steel, Mild	.04
9	1	04-1019	CAP, HUB	Steel, Mild	.10
10	5	02-1017	STUD	Steel, Mild	.16
11	1	02-1303	PIN, COTTER	Steel, Mild	.01
12	5	04-1021	NUT, LUG	Steel, Mild	.06

SPOKANE INDUSTRIES PO Box 3303 Spokane, WA. 99220 800-541-3601

Tolerance:except as noted
x/x= 1/8"
.xx= .03"
.xxx= .005"
ANG= 1

FRONT HUB ASSEMBLY

PN: 08-1011 | FIG. #3.4

Drawn: jay | Date:10/18/2005 | Size: A | Scale: NTS | Sheet 1 of 1

Confidential - Proprietary Information. Reproduction of these drawings or the manufacturing of products from these drawings for use by anyone other than Spokane Metal Products of Spokane, WA. is prohibited without written consent.

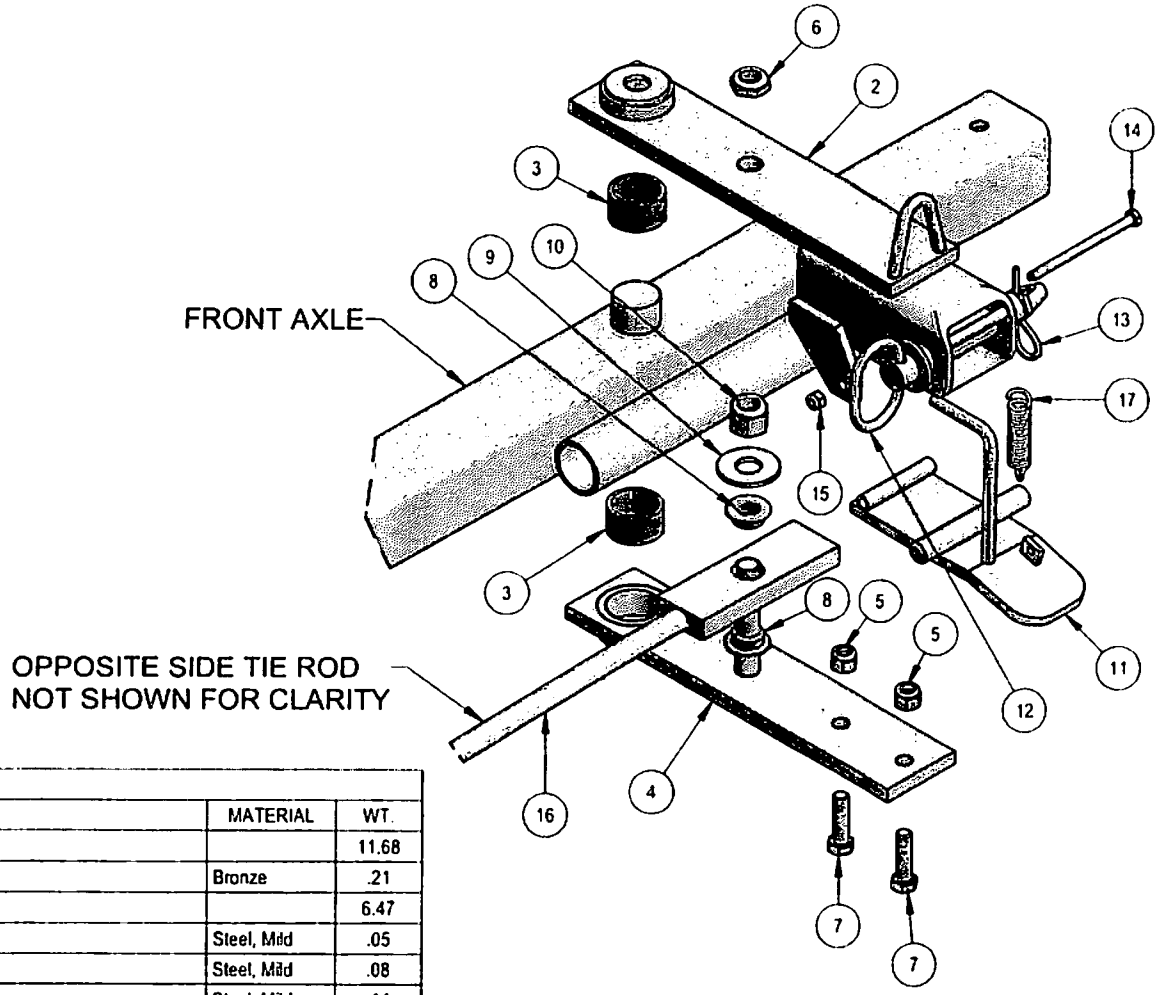

Parts List

ITEM	QTY	P.N.	DESCRIPTION	MATERIAL	WT.
2	1	07-1052	STEERING ARM		11.68
3	2	03-1014	BUSHING, STEERING ARM	Bronze	.21
4	1	07-1046	STEERING ARM, LOWER PLATE		6.47
5	2	02-12041	NUT, NYLON INSERT, 1/2" UNC	Steel, Mild	.05
6	1	02-1207	JAM NUT, NYLON INSERT, 3/4-16 UNF	Steel, Mild	.08
7	2	02-1502	BOLT, 1/2-13 x 1 3/4" LG.	Steel, Mild	.14
8	2	03-1015	BUSHING, TIE ROD	Bronze	.09
9	1	02-11072	FLATWASHER	Steel, Mild	.10
10	1	02-12071	NUT, NYLON INSERT, 3/4-16 UNF	Steel, Mild	.17
11	1	07-1020	TOE LATCH		3.46
12	1	02-1304	HITCH PIN	Steel, Mild	1.59
13	1	02-1300	PIN, COTTER	Steel, Mild	.06
14	1	02-1501	HEX BOLT, 5/16-18 x 4 1/2" LG.	Steel, Mild	.11
15	1	02-1201	NUT, NYLON INSERT, 5/16-18	Steel, Mild	.02
16	1	07-10371	TIE ROD ASSEMBLY		6.06
17	1	04-1054	SPRING	Steel, Mild	.12

SPOKANE INDUSTRIES PO Box 3303 Spokane, WA. 99220 800-541-3601

Tolerance:except as noted
x/x= 1/8"
.xx= .03"
.xxx= .005"
ANG= 1

FRONT UNDERCARRIAGE
200 GALLON MODELS

PN: 08-1029R1 | FIG #3.5

Drawn: jay | Date:11/9/2005 | Size: A | Scale: NTS | Sheet 2 of 2

Confidential - Proprietary Information. Reproduction of these drawings or the manufacturing of products from these drawings for use by anyone other than Spokane Metal Products of Spokane, WA. is prohibited without written consent.

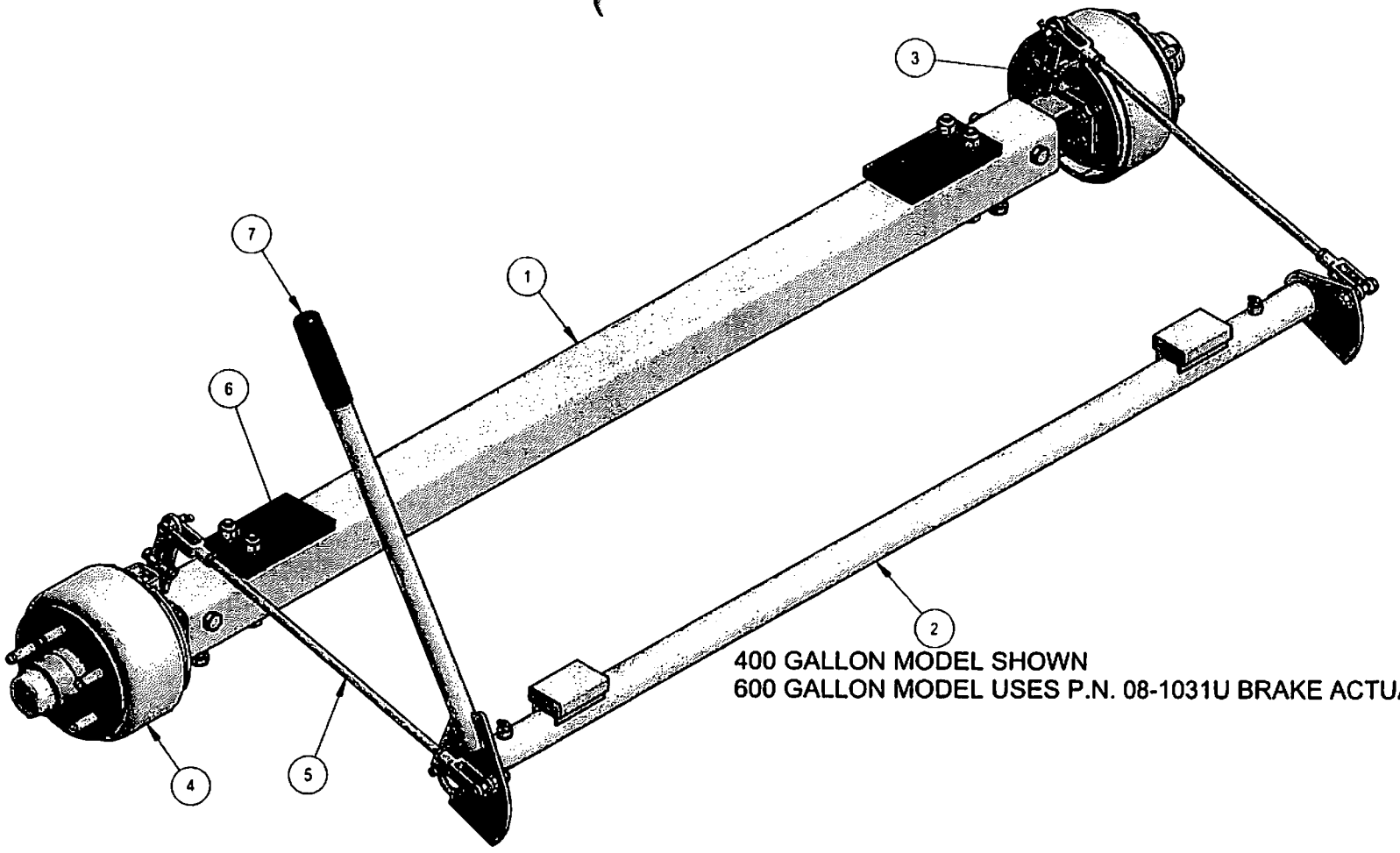

400 GALLON MODEL SHOWN
600 GALLON MODEL USES P.N. 08-1031U BRAKE ACTUATOR

Parts List

ITEM	QTY	P.N.	DESCRIPTION	MATERIAL	WT.
1	1	08-10301	REAR AXLE ASSEMBLY SEE FIGURE #4.2		61.67
2	1	08-1031W	BRAKE ACTUATOR ASSEMBLY		20.87
3	2	08-1007R	BRAKE ASSEMBLY SEE FIGURE #4.4		5.23
4	2	08-10111	REAR HUB & DRUM ASSEMBLY SEE FIGURE #4.5		14.80
5	2	08-12050	BRAKE LINKAGE SEE FIGURE #4.6		1.12
6	2	06-1012	REAR MOUNT PAD	Rubber	.27
7	1	04-1055	HAND GRIP	Rubber	05

SPOKANE INDUSTRIES PO Box 3303 Spokane, WA. 99220 800-541-3601

Tolerance:except as noted
x/x= 1/8"
.xx= .03"
.xxx= .005"
ANG= 1

REAR UNDERCARRIAGE
400 & 600 GALLON MODELS

PN: 08-10102 | FIG. #4

Drawn: jay | Date:10/7/2005 | Size: A | Scale: NTS | Sheet 1 of 1

Confidential - Proprietary Information. Reproduction of these drawings or the manufacturing of products from these drawings for use by anyone other than Spokane Metal Products of Spokane, WA. is prohibited without written consent.

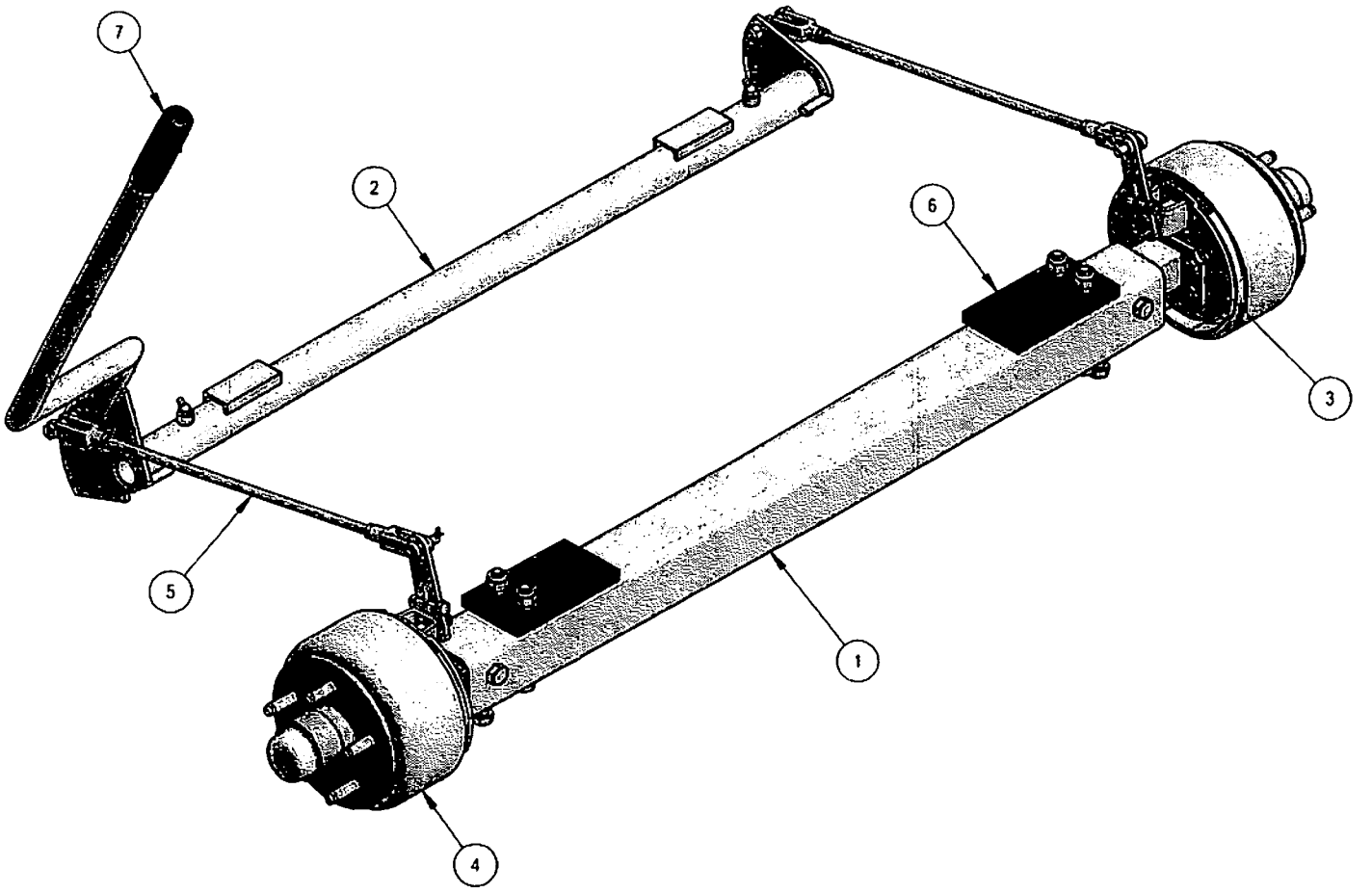

Parts List

ITEM	QTY	P.N.	DESCRIPTION	MATERIAL	WT.
1	1	08-1030ZR2	REAR AXLE ASSEMBLY SEE FIGURE #4.3		49.68
2	1	08-1031X	BRAKE ACTUATOR ASSEMBLY		17.69
3	2	08-1007R	BRAKE ASSEMBLY SEE FIGURE #4.4		5.23
4	2	08-10111	REAR HUB & DRUM ASSEMBLY SEE FIGURE #4.5		14.80
5	2	08-12050	BRAKE LINKAGE SEE FIGURE #4.6		1.12
6	2	06-1012	REAR MOUNT PAD	Rubber	.27
7	1	04-1055	HAND GRIP	Rubber	.05

SPOKANE INDUSTRIES PO Box 3303 Spokane, WA. 99220 800-541-3601

Tolerance:except as noted
x/x= 1/8"
.xx= .03"
.xxx= .005"
ANG= 1

REAR UNDERCARRIAGE
200 GALLON MODELS

PN: 08-10101 | FIG. #4.1

Drawn: jay | Date:11/16/2005 | Size: A | Scale: NTS | Sheet 1 of 1

Confidential - Proprietary Information. Reproduction of these drawings or the manufacturing of products from these drawings for use by anyone other than Spokane Metal Products of Spokane, WA. is prohibited without written consent.

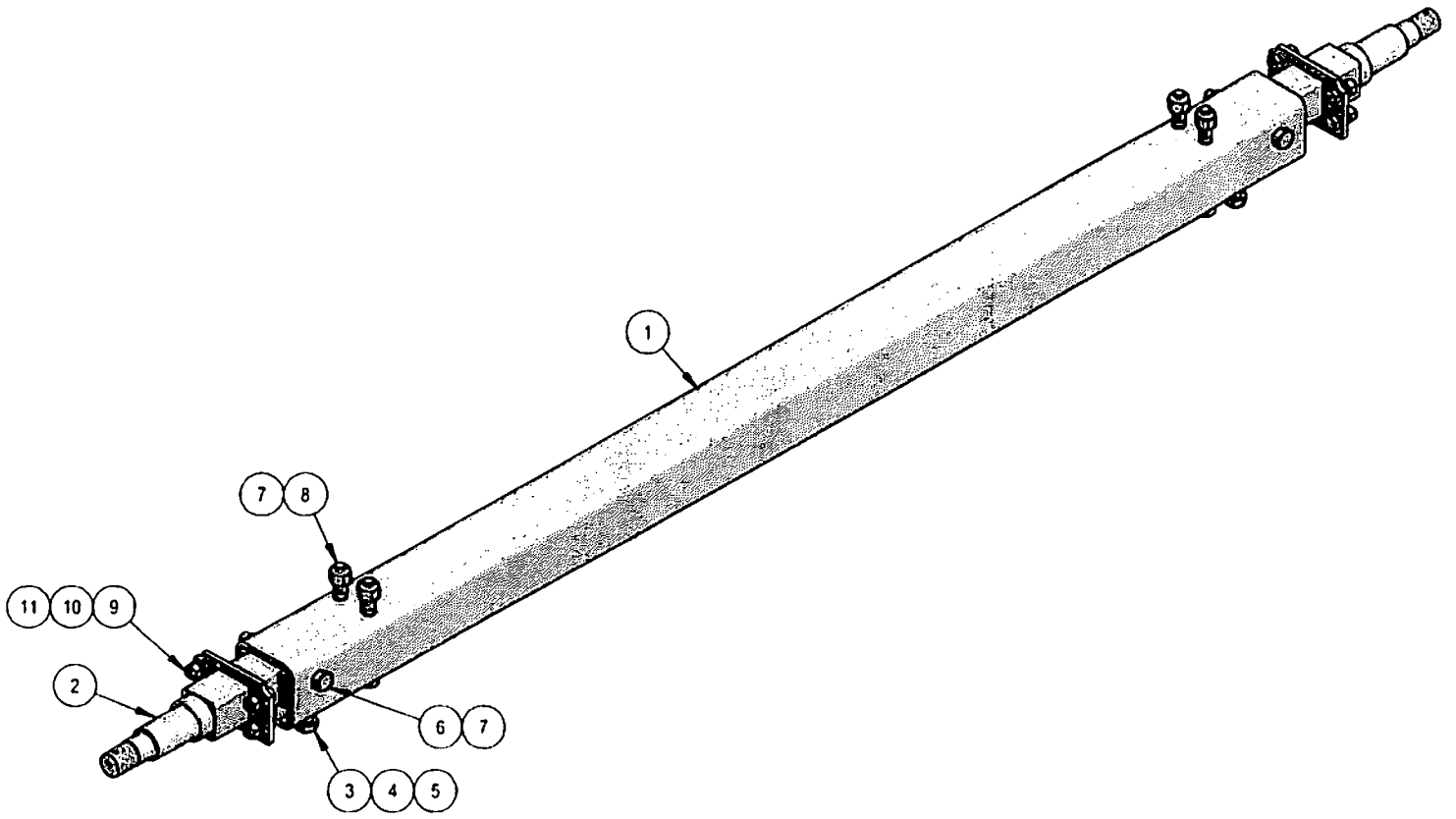

Parts List

ITEM	QTY	P.N.	DESCRIPTION	MATERIAL	WT
1	1	05-1023	REAR AXLE TUBE	Steel, Mild	39.66
2	2	07-1010R	REAR SPINDLE		9.39
3	2	02-10041	BOLT, HEX, 1/2" UNC x 1 1/2" LG.	Steel, Mild	.13
4	2	02-1014	NUT, HEX, 1/2" UNC	Steel, Mild	.04
5	2	02-1203	NUT, HEAVY HEX, 1/2" UNC	Steel, Mild	.07
6	2	02-1505	BOLT, HEX, 1/2" UNC x 4" LG.	Steel, Mild	.28
7	6	02-12041	NUT, NYLON INSERT, 1/2" UNC	Steel, Mild	.06
8	4	02-1503	HEX BOLT, 1/2" UNC x 4 1/2" LG.	Steel, Mild	.31
9	8	02-15035	BOLT, 3/8 UNC x 1" LG.	Steel, Mild	.05
10	8	02-1103	LOCK WASHER, 3/8"	Steel, Mild	.01
11	8	02-1216	HEX NUT, 3/8"-UNC	Steel, Mild	.02

SPOKANE INDUSTRIES PO Box 3303 Spokane, WA. 99220 800-541-3601

Tolerance:except as noted
x/x= 1/8"
.xx= .03"
.xxx= .005"
ANG= 1

REAR AXLE
400 & 600 GALLON MODELS

PN: 08-10301 | FIG. #4.2

Drawn: jay | Date:10/7/2005 | Size: A | Scale: NTS | Sheet 1 of 1

Confidential - Proprietary Information. Reproduction of these drawings or the manufacturing of products from these drawings for use by anyone other than Spokane Metal Products of Spokane, WA. is prohibited without written consent.

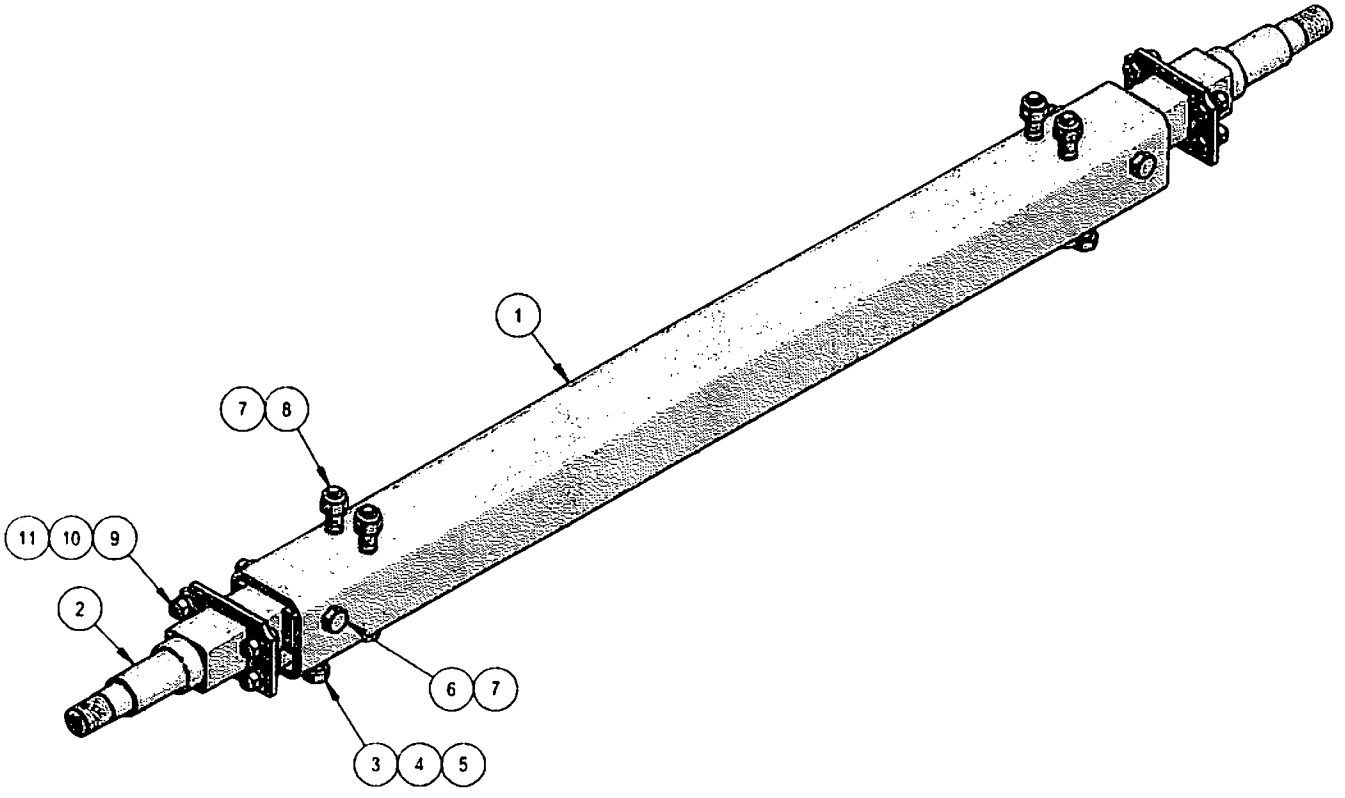

Parts List

ITEM	QTY	P.N.	DESCRIPTION	MATERIAL	WT.
1	1	05-1054	REAR AXLE	Steel, Mild	27.72
2	2	07-1010R	REAR SPINDLE		9.39
3	2	02-10041	BOLT, HEX, 1/2" UNC x 1 1/2" LG.	Steel, Mild	.13
4	2	02-1014	NUT, HEX, 1/2" UNC	Steel, Mild	.04
5	2	02-1203	NUT, HEAVY HEX, 1/2" UNC	Steel, Mild	.07
6	2	02-1505	BOLT, HEX, 1/2" UNC x 4" LG.	Steel, Mild	.28
7	6	02-12041	NUT, NYLON INSERT, 1/2" UNC	Steel, Mild	.05
8	4	02-1503	HEX BOLT, 1/2" UNC x 4 1/2" LG.	Steel, Mild	.31
9	8	02-15035	BOLT, 3/8 UNC x 1" LG.	Steel, Mild	.05
10	8	02-1103	LOCK WASHER, 3/8"	Steel, Mild	.01
11	8	02-1216	HEX NUT, 3/8"-UNC	Steel, Mild	.02

SPOKANE INDUSTRIES PO Box 3303 Spokane, WA. 99220 800-541-3601

Tolerance:except as noted
x/x= 1/8"
.xx= .03"
.xxx= .005"
ANG= 1

REAR AXLE
200 GALLON MODELS

PN: 08-1030ZR2 | FIG. #4.3

Drawn: jay | Date:11/16/2005 | Size: A | Scale: NTS | Sheet 1 of 1

Confidential - Proprietary Information. Reproduction of these drawings or the manufacturing of products from these drawings for use by anyone other than Spokane Metal Products of Spokane, WA. is prohibited without written consent.

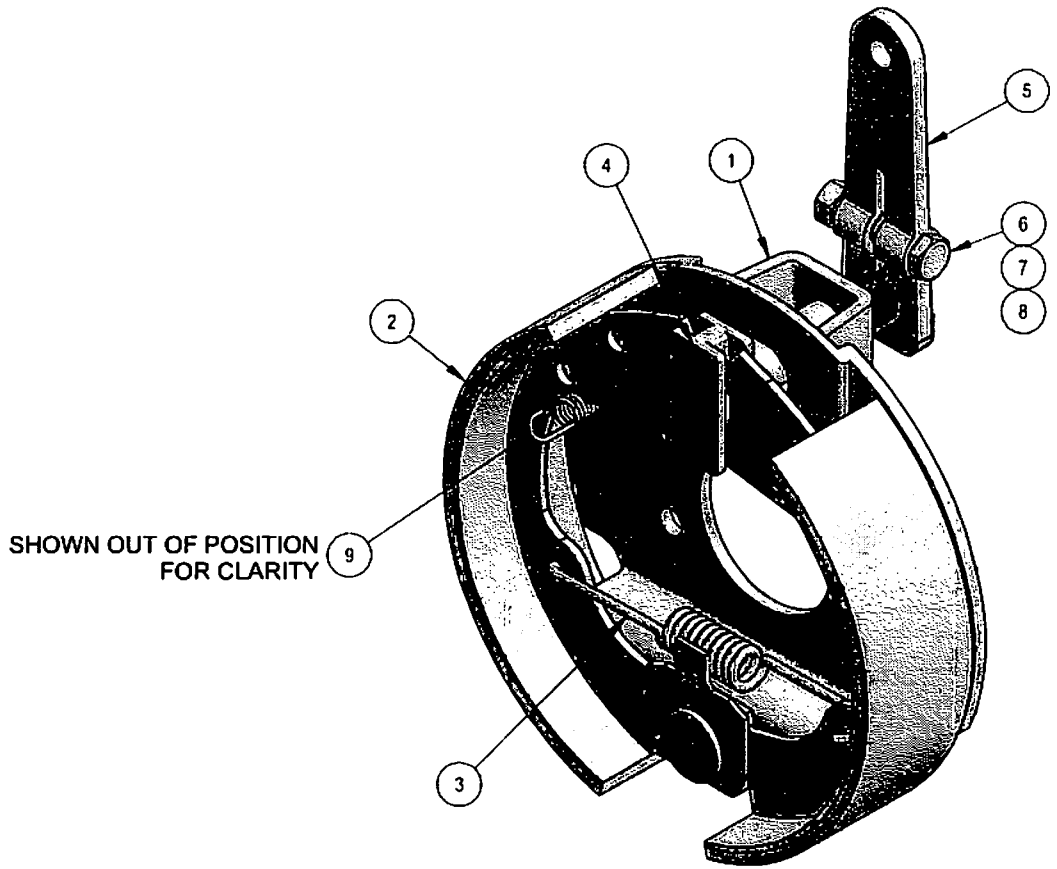

Parts List					
ITEM	QT	P.N.	DESCRIPTION	MATERIAL	WT.
1	1	04-1064R	BACK PLATE	Steel, Mild	2.11
2	2	04-1065R	BRAKE SHOE	Steel, Mild	1.12
3	1	04-10265R	RETURN SPRING	Steel, Mild	.06
4	1	04-1028R	CAM	Steel, Mild	.43
5	1	04-1030R	CAM LEVER	Steel, Mild	.32
6	1	02-10017R	HEX HEAD CAP SCREW, 5/16"-UNF 1 1/2" LG.	Steel, Mild	.05
7	1	02-12011	NUT, 5/16"-UNF GRADE 8	Steel, Mild	.01
8	1	02-11011	LOCK WASHER, 5/16"	Steel, Mild	.00
9	2	04-1026R	BRAKE SHOE HOLD DOWN SPRING	Steel, Mild	.01

SPOKANE INDUSTRIES PO Box 3303 Spokane, WA. 99220 800-541-3601

Tolerance:except as noted
x/x= 1/8"
.xx= .03"
.xxx= .005"
ANG= 1

BRAKE ASSEMBLY

PN: 08-1007R | FIG. #4.4

Drawn: jay | Date:10/11/2005 | Size: A | Scale: NTS | Sheet 1 of 1

Confidential - Proprietary Information. Reproduction of these drawings or the manufacturing of products from these drawings for use by anyone other than Spokane Metal Products of Spokane, WA. is prohibited without written consent.

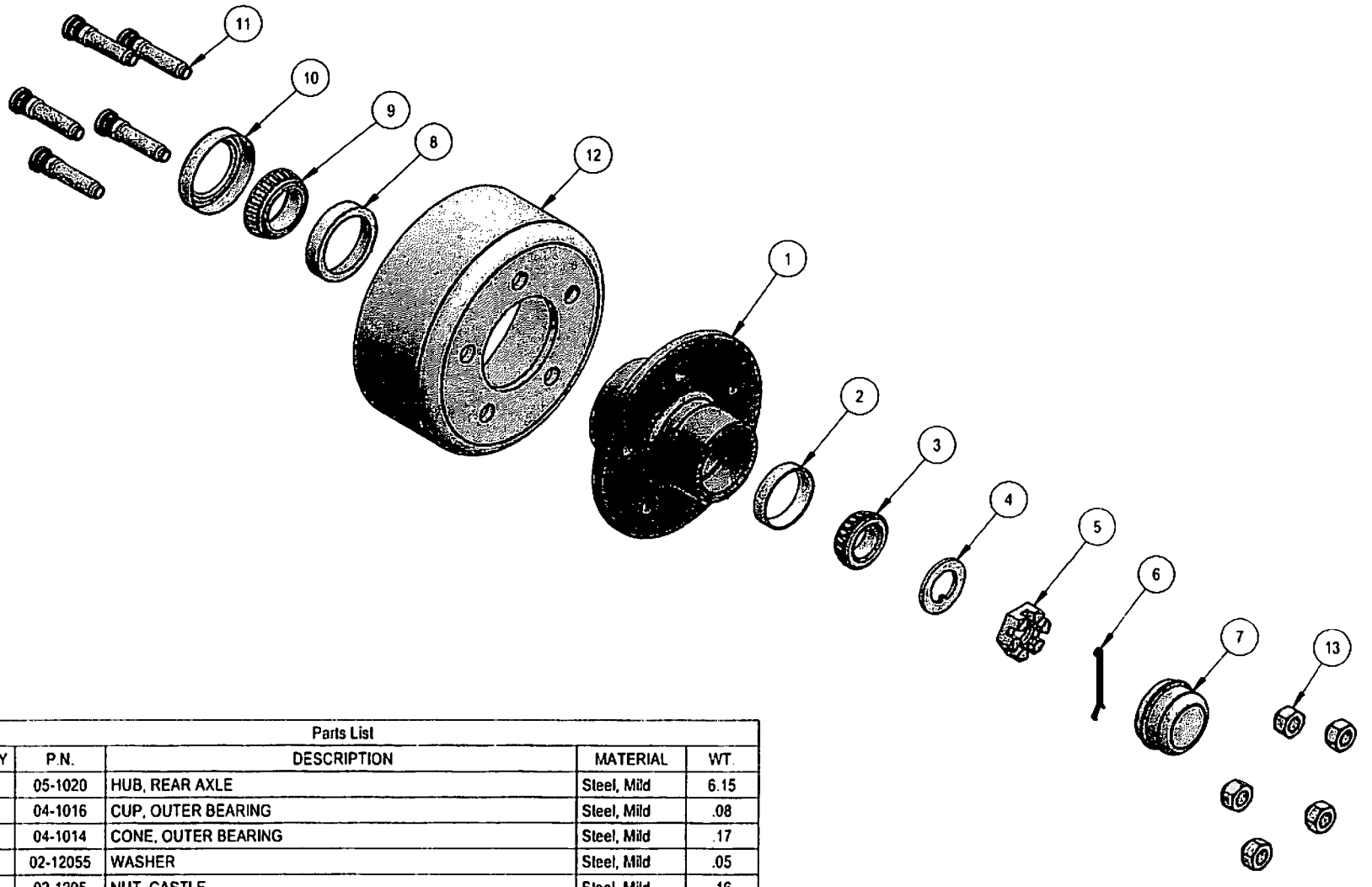

Parts List					
ITEM	QTY	P.N.	DESCRIPTION	MATERIAL	WT.
1	1	05-1020	HUB, REAR AXLE	Steel, Mild	6.15
2	1	04-1016	CUP, OUTER BEARING	Steel, Mild	.08
3	1	04-1014	CONE, OUTER BEARING	Steel, Mild	.17
4	1	02-12055	WASHER	Steel, Mild	.05
5	1	02-1205	NUT, CASTLE	Steel, Mild	.16
6	1	02-1303	PIN, COTTER	Steel, Mild	.01
7	1	04-1019	CAP, HUB	Steel, Mild	.10
8	1	04-1015	CUP, INNER BEARING	Steel, Mild	.18
9	1	04-1013	CONE, INNER BEARING	Steel, Mild	.24
10	1	04-1012	SEAL, BEARING	Steel, Mild	.04
11	5	02-1017	STUD	Steel, Mild	.16
12	1	05-1021	DRUM, BRAKE	Steel, Mild	6.80
13	5	04-1021	NUT, LUG	Steel, Mild	.06

SPOKANE INDUSTRIES PO Box 3303 Spokane, WA. 99220 800-541-3601

Tolerance:except as noted
x/x= 1/8"
.xx= .03"
.xxx= .005"
ANG= 1

REAR HUB & DRUM ASSEMBLY

PN: 08-10111 | FIG. #4.5

Drawn: jay | Date:11/30/2005 | Size: A | Scale: NTS | Sheet 1 of 1

Confidential - Proprietary Information. Reproduction of these drawings or the manufacturing of products from these drawings for use by anyone other than Spokane Metal Products of Spokane, WA. is prohibited without written consent.

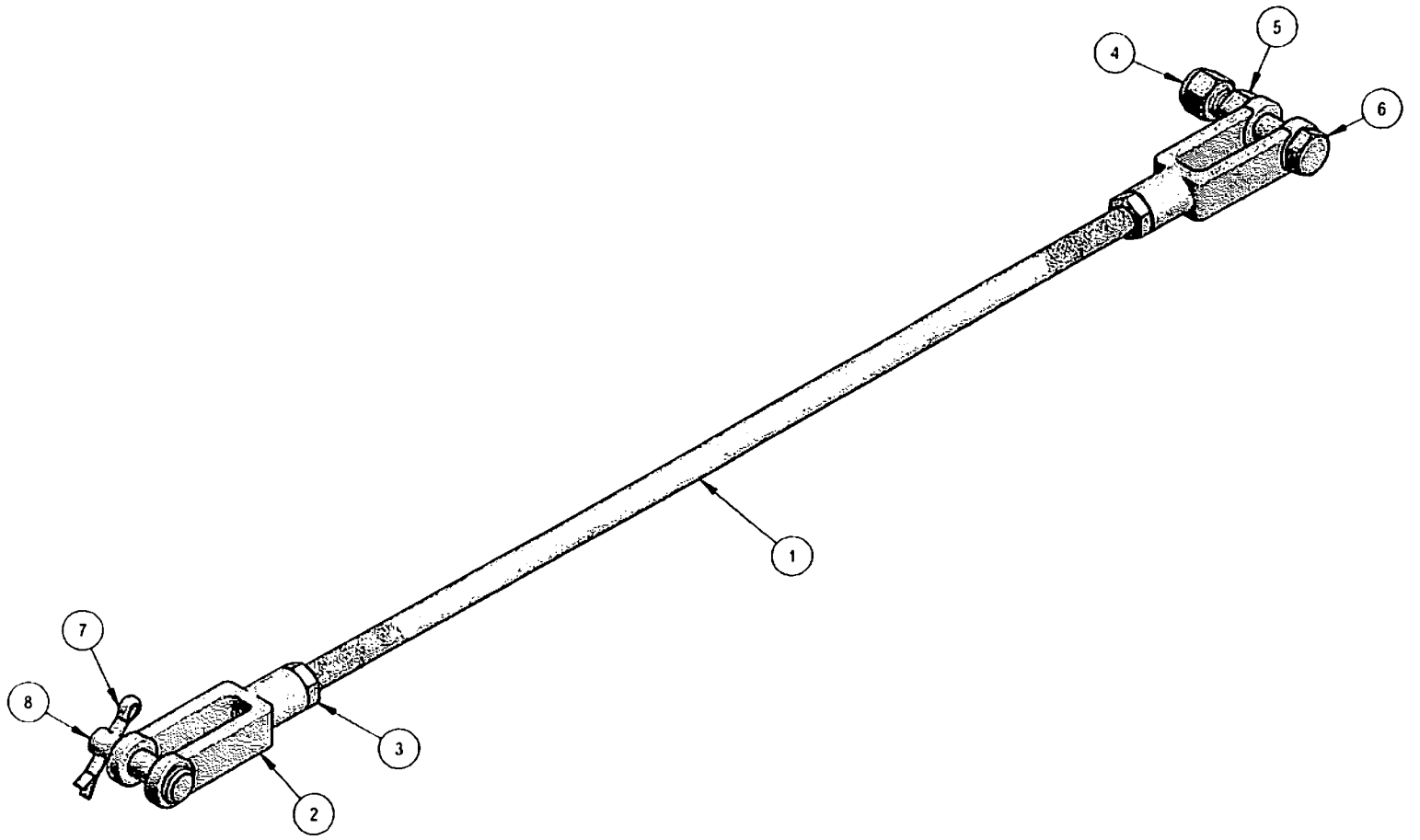

Parts List					
ITEM	QTY	P.N.	DESCRIPTION	MATERIAL	WT.
1	1	05-1026	BRAKE ROD	Steel, Mild	.52
2	2	04-2516	YOKE END	Steel, Mild	.20
3	2	02-100231	HEX JAM NUT, 3/8"-UNF	Steel, Mild	.01
4	1	02-12021	NUT, 3/8" UNC NYLON INSERT	Steel, Mild	.03
5	1	02-1216	HEX NUT, 3/8"-UNC	Steel, Mild	.02
6	1	02-10012	HEX CAP SCREW, 3/8" UNC 2" LG.	Steel, Mild	08
7	1	02-1301	COTTER PIN	Steel, Mild	01
8	1	02-1302	CLEVIS PIN, 3/8" x 1 1/4" LG.	Steel, Mild	.05

SPOKANE INDUSTRIES PO Box 3303 Spokane, WA 99220 800-541-3601

Tolerance:except as noted
x/x= 1/8"
.xx= .03"
.xxx= .005"
ANG= 1

BRAKE LINKAGE

PN: 08-12050 | FIG. #4.6

Drawn: jay | Date:10/11/2005 | Size: A | Scale: NTS | Sheet 1 of 1

Confidential - Proprietary Information. Reproduction of these drawings or the manufacturing of products from these drawings for use by anyone other than Spokane Metal Products of Spokane, WA. is prohibited without written consent.

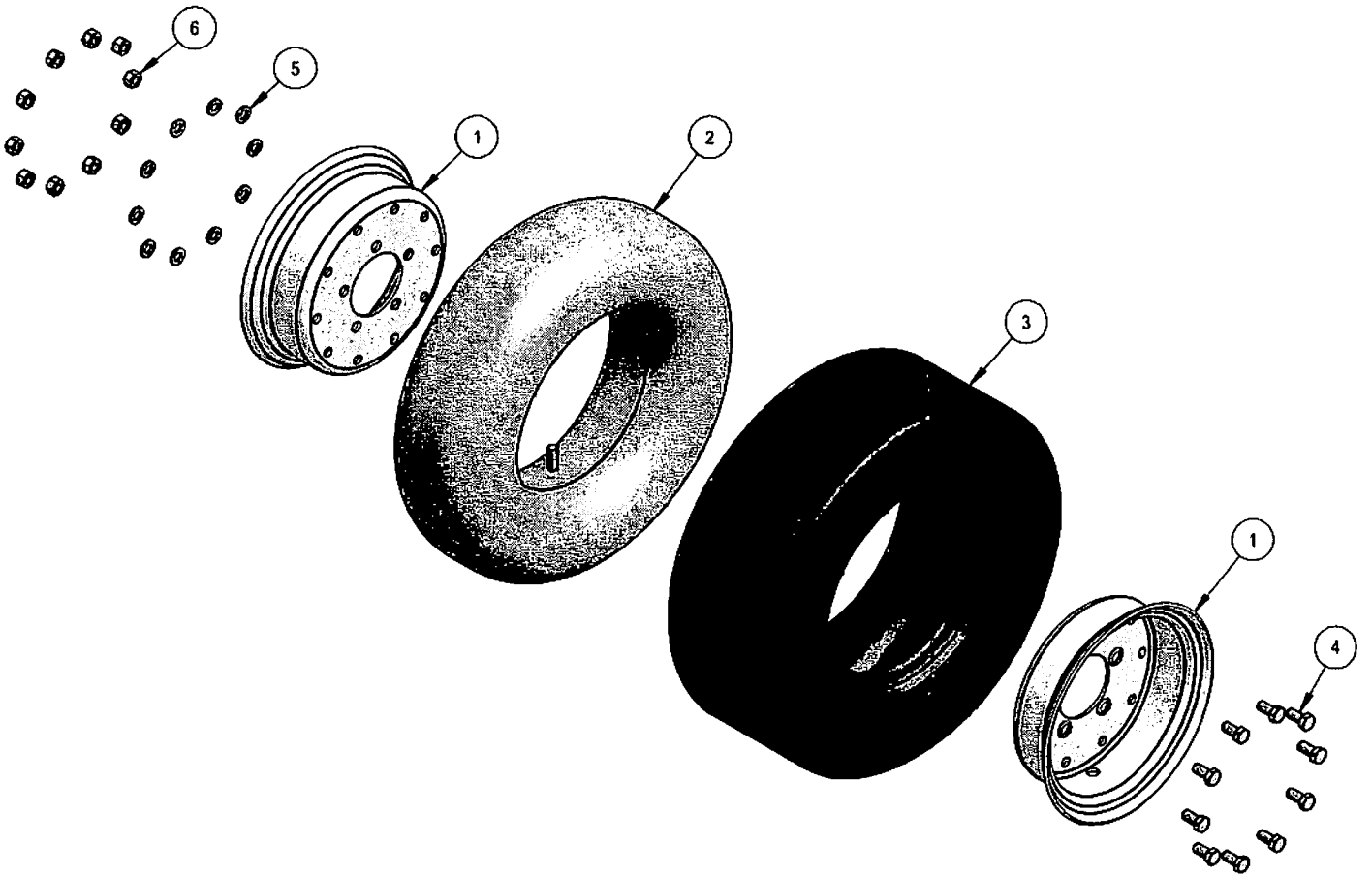

Parts List

ITEM	QTY	P.N.	DESCRIPTION	MATERIAL	WT.
1	1	04-1020	WHEEL, SPLIT RIM	Steel	17.89
2	1	04-1045	TUBE, INNER	Rubber	2.79
3	1	04-10221	TIRE, E-RANGE	Rubber	9.70
4	10	02-10043	SCREW, HEX CAP, 1/2-20 1" LG.	Steel, Mild	.10
5	10	02-1104	LOCK WASHER, 1/2"	Steel, Mild	.00
6	10	02-1208	HEX NUT, 1/2" UNF	Steel, Mild	.04

Spokane Industries Spokane Metal Products Division
PO Box 3303 Spokane, WA. 99220 800-541-3601

Tolerance:except as noted
x/x= 1/8"
.xx= .03"
.xxx= .005"
ANG= 1

WHEEL & TIRE ASSEMBLY
E-RANGE FOR 400 & 600 GALLON MODELS

PN: 07-10201 | FIG. #5

Drawn: jay | Date:11/24/2004 | Size: A | Scale: NTS | Sheet 1 of 1

Confidential - Proprietary Information. Reproduction of these drawings or the manufacturing of products from these drawings for use by anyone other than Spokane Metal Products of Spokane, WA. is prohibited without written consent.

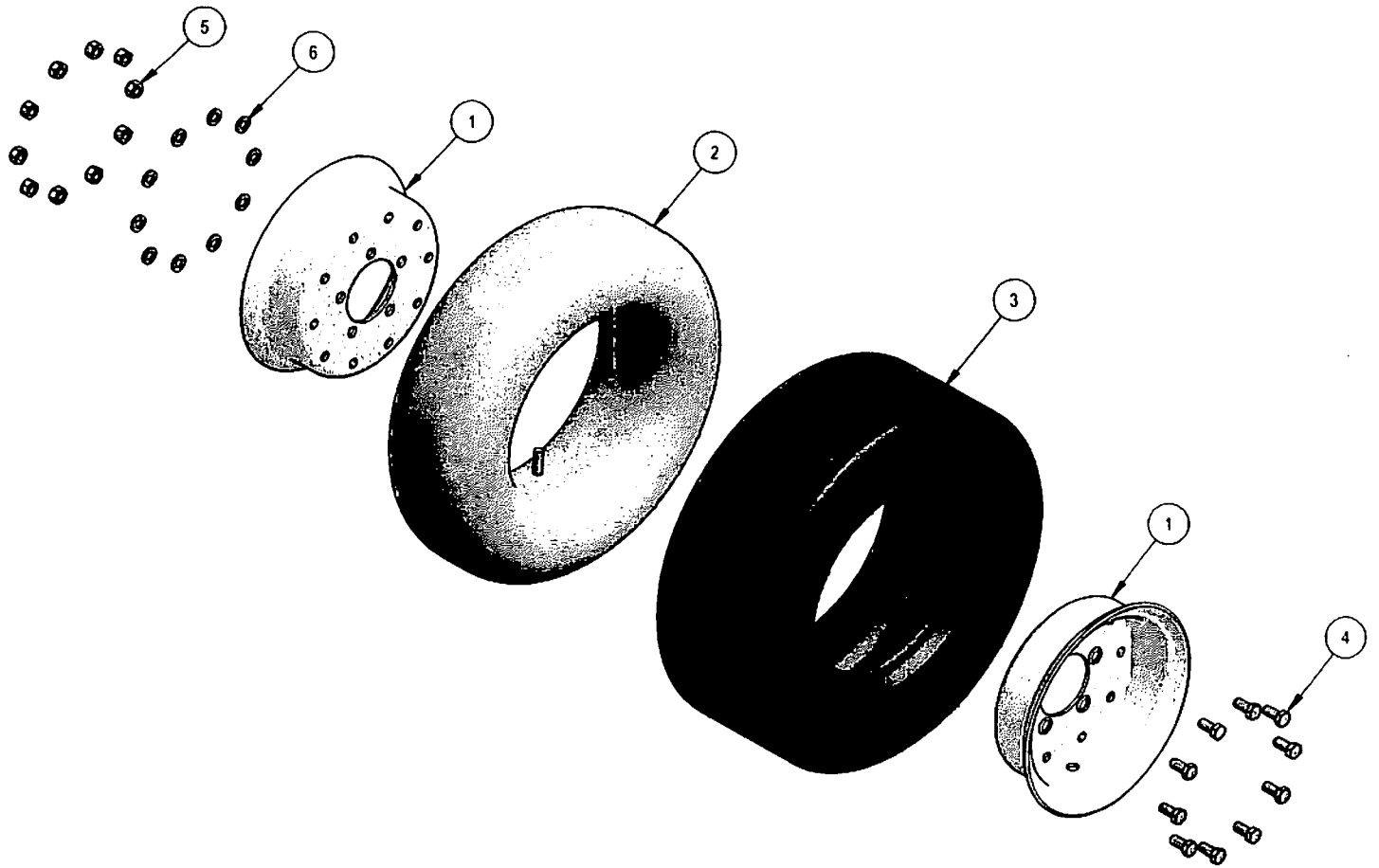

Parts List

ITEM	QTY	P.N.	DESCRIPTION	MATERIAL	WT.
1	1	04-1020	WHEEL, SPLIT RIM		17.89
2	1	04-1045	TUBE, INNER	Rubber	2.79
3	1	04-10222	TIRE, B-RANGE	Rubber	9.70
4	10	2-10043	SCREW, HEX CAP, 1/2-20 1" LG.	Steel, Mild	.10
5	10	02-1208	HEX NUT, 1/2" UNF	Steel, Mild	.04
6	10	02-1104	LOCK WASHER, 1/2"	Steel, Mild	.01

SPOKANE INDUSTRIES PO Box 3303 Spokane, WA. 99220 800-541-3601

Tolerance:except as noted
x/x= 1/8"
.xx= .03"
.xxx= .005"
ANG= 1

Drawn: jay

WHEEL & TIRE ASSEMBLY
B-RANGE FOR 200 GALLON MODELS

PN: 07-10202 | FIG. #5.1

Date:11/17/2005 | Size: A | Scale: NTS | Sheet 1 of 1

Confidential - Proprietary Information. Reproduction of these drawings or the manufacturing of products from these drawings for use by anyone other than Spokane Metal Products of Spokane, WA. is prohibited without written consent.

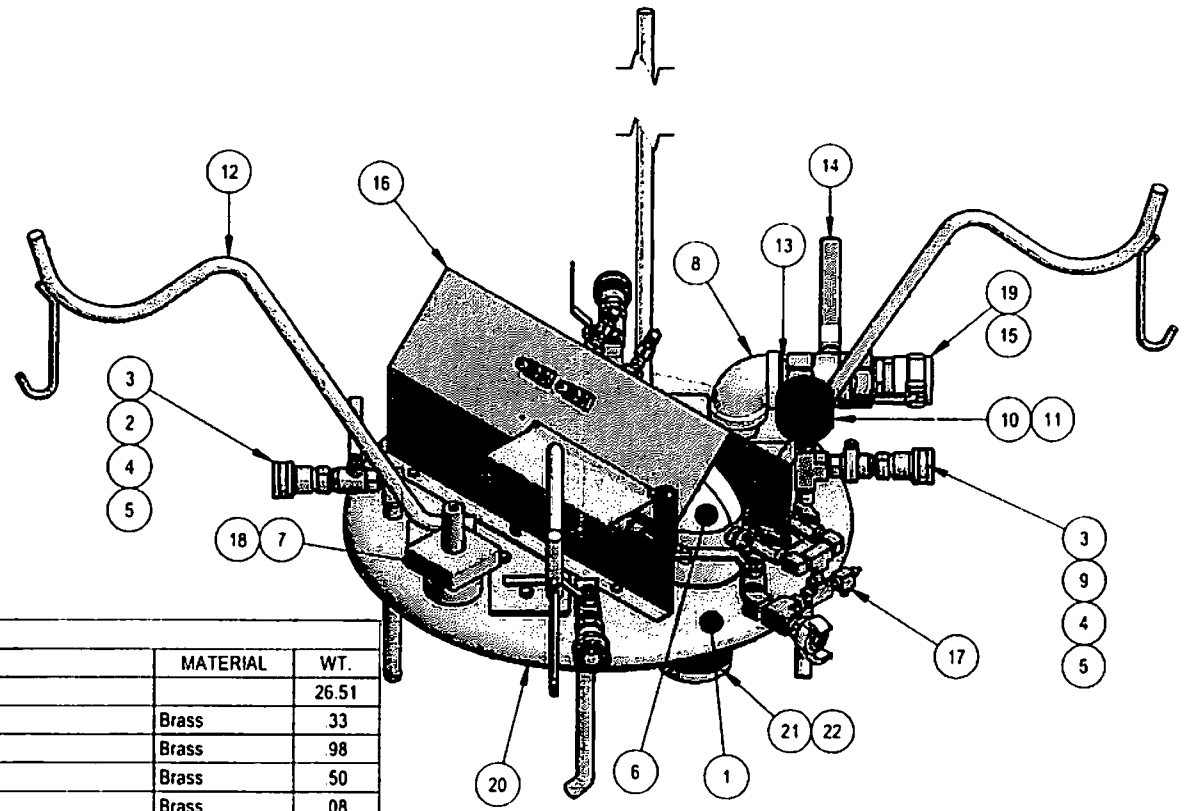

Parts List

ITEM	QTY	P.N.	DESCRIPTION	MATERIAL	WT.
1	1	07-10225	SEDIMENT CHAMBER LID		26.51
2	3	03-1006	STREET ELBOW, 1/2"	Brass	.33
3	4	03-111394	FEMALE QUICK CONNECT, 1/2"	Brass	.98
4	4	04-1032	BALL VALVE, 1/2"	Brass	.50
5	5	03-10081	CLOSE NIPPLE, 1/2"	Brass	.08
6	1	08-1004	PRIMARY VACUUM GENERATOR		5.69
7	1	04-10098	VACUUM RELIEF VALVE	Brass	2.30
8	1	03-1001	ELBOW, 1 1/2"	Aluminum	.78
9	1	03-100584	TEE, 1/2"	Brass	.50
10	1	04-0160	VACUUM GAUGE		.18
11	1	03-10152	BUSHING, 1/2" x 1/4"	Brass	.08
12	2	07-1075R	HOSE HANGER		3.80
13	1	03-02922	CLOSE NIPPLE, 1 1/2"	Aluminum	.13
14	1	04-10321	BALL VALVE, 1 1/2"	Brass	3.60
15	1	03-1002	BUSHING, 1 1/2" x 1 1/4"	Aluminum	.16
16	1	08-10459	PRIMARY VACUUM COVER SV/SVU SEE FIGURE #6.1		9.06
17	1	08-14005	UDA SEE FIGURE #6.2		7.15
18	1	07-10339	VACUUM RELIEF VALVE RAIN COVER	Stainless Steel	.33
19	1	04-10335	CAMLOCK, 1 1/4"	Aluminum	.47
20	1	06-1022V	SEDIMENT CHAMBER GASKET	Sponge Rubber	1.28
21	1	06-101791	3" REFUELING HOSE, 6" LG.	Rubber	.52
22	2	03-10181	HOSE CLAMP	Stainless Steel	.04

SPOKANE INDUSTRIES PO Box 3303 Spokane, WA. 99220 800-541-3601

Tolerance:except as noted
x/x= 1/8"
.xx= .03"
.xxx= .005"
ANG= 1

SVU VACUUM SYSTEM ASSEMBLY

PN: 08-1000U | FIG. #6

Drawn: jay | Date:10/12/2005 | Size: A | Scale: NTS | Sheet 1 of 1

Confidential - Proprietary Information. Reproduction of these drawings or the manufacturing of products from these drawings for use by anyone other than Spokane Metal Products of Spokane, WA. is prohibited without written consent.

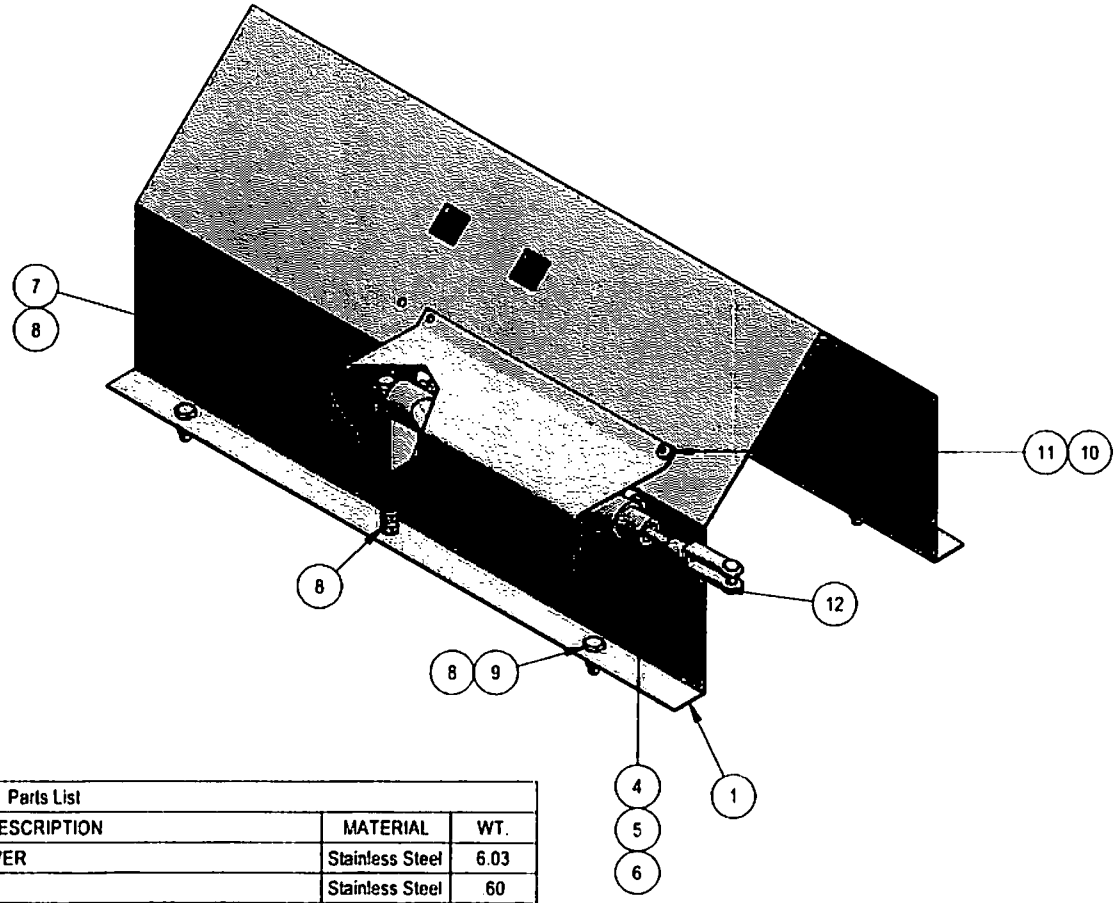

Parts List

ITEM	QTY	P.N.	DESCRIPTION	MATERIAL	WT.
1	1	07-1034SV	VACUUM GENERATOR COVER	Stainless Steel	6.03
2	1	01-8360	CYLINDER COVER	Stainless Steel	.60
3	1	01-8093	BASKET CLIP	Stainless Steel	.06
4	1	04-7001	AIR CYLINDER		2.03
5	1	03-1075	HOSE ADAPTER, 1/8" x 1/8"	Brass	.03
6	1	03-1076	MUFFLER, 1/8" NPT	Brass	.03
7	1	02-1000	BOLT, 1/4" UNC 1" LG.	Stainless Steel	.02
8	8	02-1200	NUT, NYLON INSERT, 1/4-20 UNC	Stainless Steel	.01
9	5	02-100101	HEX CAP SCREW, 1/4 UNC 3/4" LG.	Stainless Steel	.02
10	1	02-12101	NUT, NYLON INSERT, 10-32	Stainless Steel	.01
11	1	04-06740	HEX SOCKET BUTTON HEAD CAP SCREW, 10-32 1/2" LG.	Stainless Steel	.01
12	1	04-25161	YOKE, 1/4-28 UNF	Steel, Mild	.10

SPOKANE INDUSTRIES PO Box 3303 Spokane, WA 99220 800-541-3601

Tolerance:except as noted
x/x= 1/8"
.xx= .03"
.xxx= .005"
ANG= 1

PRIMARY VACUUM COVER SV/SVU

PN: 08-10459 | FIG. #6.1

Drawn: jay | Date:10/14/2005 | Size: A | Scale: NTS | Sheet 1 of 1

Confidential - Proprietary Information. Reproduction of these drawings or the manufacturing of products from these drawings for use by anyone other than Spokane Metal Products of Spokane, WA. is prohibited without written consent.

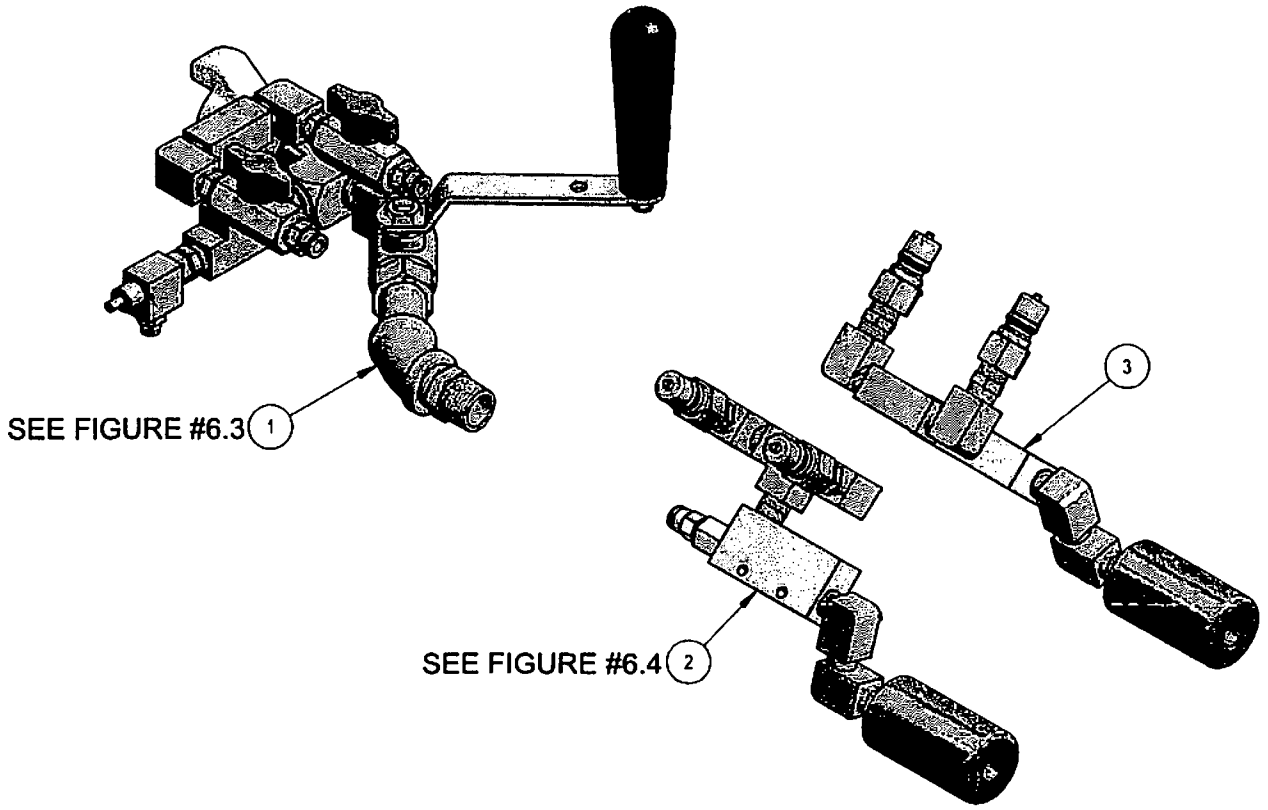

Parts List

ITEM	QTY	P.N.	DESCRIPTION	MATERIAL	WT.
1	1	08-14020	UDA AIR MANIFOLD		3.95
2	1	08-14015	SECONDARY VACUUM GENERATOR, RIGHT SIDE		1.60
3	1	08-14015	SECONDARY VACUUM GENERATOR, LEFT SIDE		1.60

SPOKANE INDUSTRIES

PO Box 3303 Spokane, WA. 99220 800-541-3601

Tolerance:except as noted
x/x= 1/8"
.xx= .03"
.xxx= .005"
ANG= 1

UDA

PN: 08-14005

FIG. #6.2

Drawn: jay | Date:10/5/2005 | Size: A | Scale: NTS | Sheet 1 of 1

Confidential - Proprietary Information. Reproduction of these drawings or the manufacturing of products from these drawings for use by anyone other than Spokane Metal Products of Spokane, WA. is prohibited without written consent.

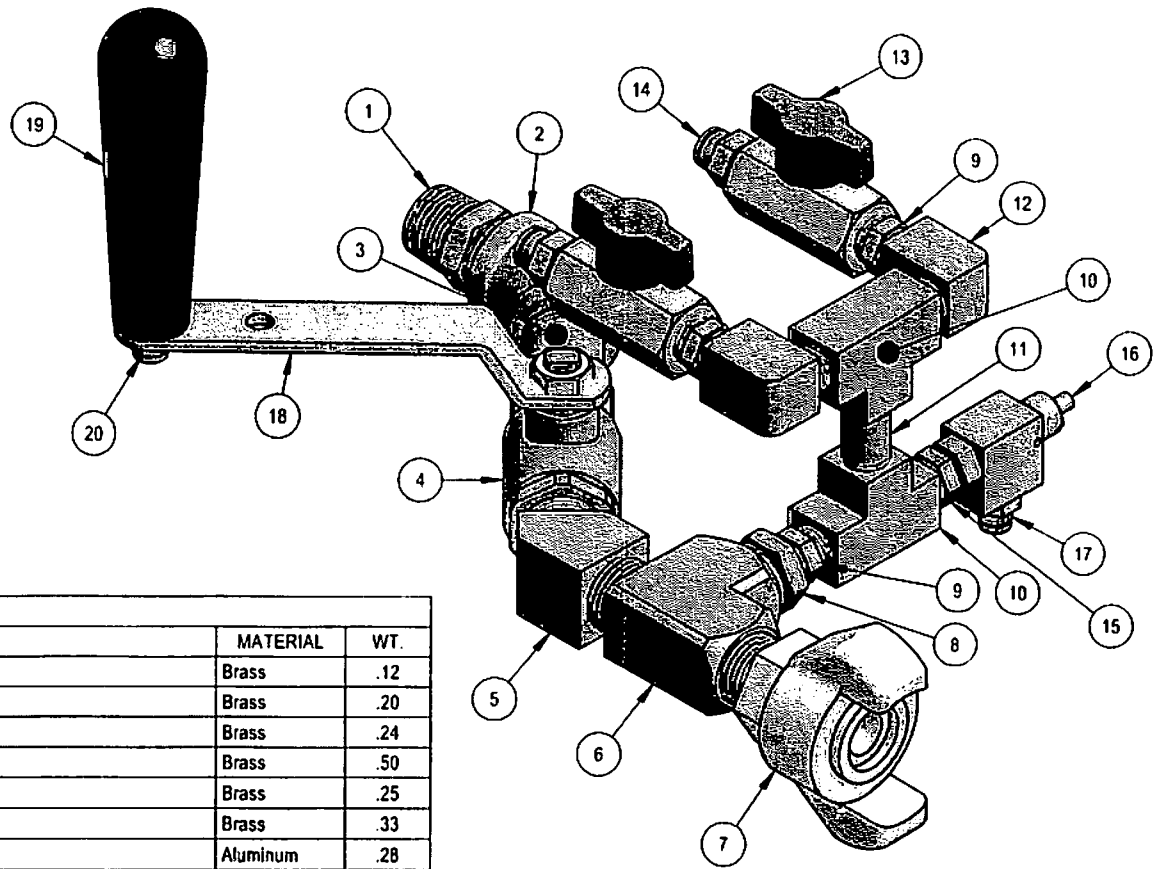

Parts List

ITEM	QTY	P.N.	DESCRIPTION	MATERIAL	WT.
1	1	03-10083	HEX NIPPLE, 1/2"	Brass	.12
2	1	03-10061	ELBOW, 45 DEGREE, 1/2"	Brass	.20
3	1	03-10082	NIPPLE, 1/2" x 2" LG.	Brass	.24
4	1	04-1032	BALL VALVE, 1/2"	Brass	.50
5	1	03-10062	STREET ELBOW, 45 DEGREE, 1/2"	Brass	.25
6	1	03-10057	STREET TEE, 1/2"	Brass	.33
7	1	04-1056	AIR CHUCK	Aluminum	.28
8	1	03-10152	BUSHING, 1/2" x 1/4"	Brass	.08
9	3	03-10691	HEX NIPPLE, 1/4"	Brass	.06
10	2	03-11131	TEE, 1/4"	Brass	.19
11	1	03-10692	NIPPLE, 1/4" x 1 1/2" LG.	Brass	.06
12	2	03-11136	STREET ELBOW, 1/4"	Brass	.14
13	2	04-2506	BALL VALVE, 1/4" W/ T-HANDLE	Brass	.23
14	2	03-1079	PUSH CONNECT, 1/4" x 1/4"	Brass	.06
15	1	03-10693	HEX NIPPLE, 1/4" x 1/8"	Brass	.04
16	1	04-10327	BYPASS VALVE	Brass	.17
17	1	03-1075	HOSE ADAPTER, 1/8" x 1/8"	Brass	.03
18	1	01-8359	HANDLE, VALVE	Stainless Steel	.14
19	1	04-10551	HANDLE	Phenolic	.14
20	1	02-1200	NUT, NYLON INSERT, 1/4-20 UNC	Stainless Steel	.01

SPOKANE INDUSTRIES PO Box 3303 Spokane, WA. 99220 800-541-3601

Tolerance:except as noted
x/x= 1/8"
.xx= .03"
.xxx= .005"
ANG= 1

Drawn: jay

UDA AIR MANIFOLD

PN: 08-14020 | FIG. #6.3

Date:10/14/2005 | Size: A | Scale: NTS | Sheet 1 of 1

Confidential - Proprietary Information. Reproduction of these drawings or the manufacturing of products from these drawings for use by anyone other than Spokane Metal Products of Spokane, WA. is prohibited without written consent.

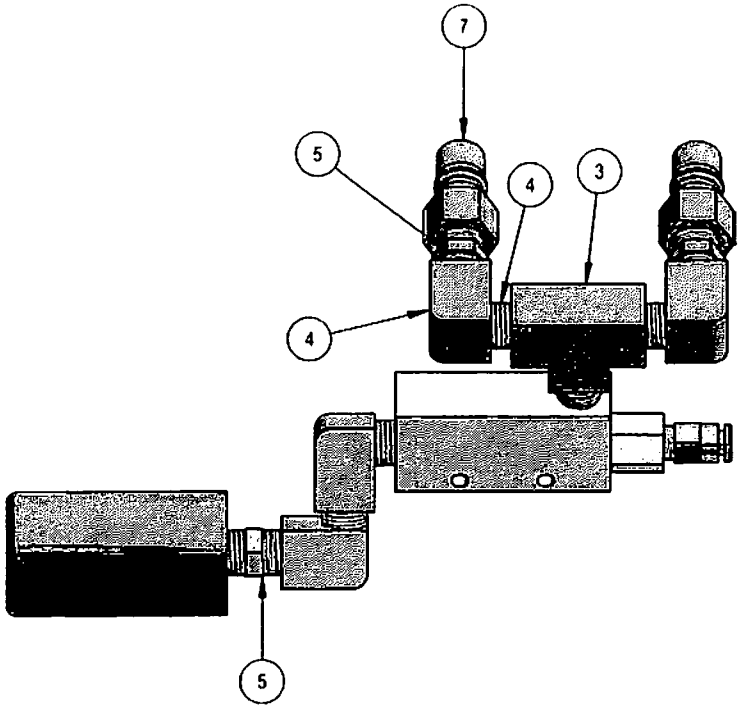

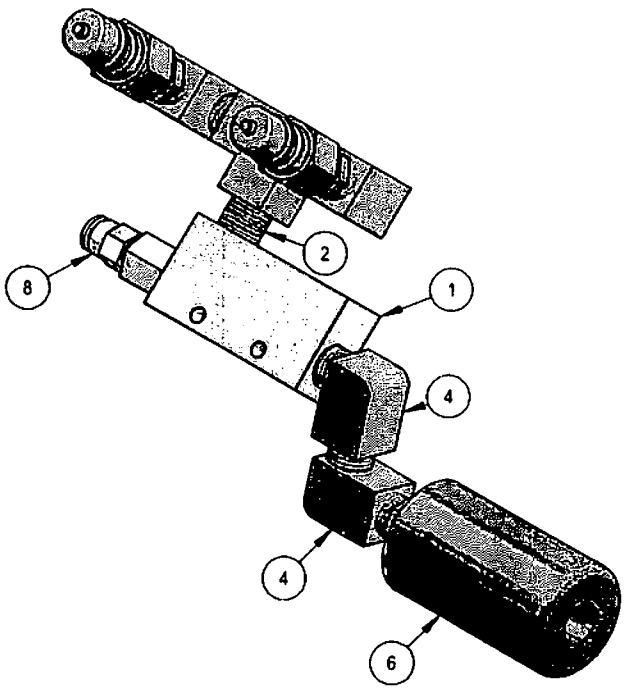

Parts List

ITEM	QTY	P.N.	DESCRIPTION	MATERIAL	WT.
1	1	04-10035B	BODY FROM SECONDARY VACUUM GENERATOR	Aluminum	.20
2	1	03-10690	CLOSE NIPPLE, 1/4"	Brass	.03
3	1	03-11131	TEE, 1/4"	Brass	.19
4	4	03-11136	STREET ELBOW, 1/4"	Brass	.14
5	3	03-10691	HEX NIPPLE, 1/4"	Brass	.06
6	1	04-10335M	MUFFLER FROM SECONDARY VACUUM GENERATOR	Delrin, Black	.19
7	2	03-111397	MALE QUICK-CONNECT, 1/4"	Brass	.12
8	1	03-1078	PUSH CONNECT, 1/8" NPT x 1/4" HOSE	Brass	.03

SPOKANE INDUSTRIES PO Box 3303 Spokane, WA. 99220 800-541-3601

Tolerance:except as noted
x/x= 1/8"
.xx= .03"
.xxx= .005"
ANG= 1

SECONDARY VACUUM GENERATOR

PN: 08-14015 | FIG. #6.4

Drawn: jay | Date:10/14/2005 | Size: A | Scale: NTS | Sheet 1 of 1

Confidential - Proprietary Information. Reproduction of these drawings or the manufacturing of products from these drawings for use by anyone other than Spokane Metal Products of Spokane, WA. is prohibited without written consent.

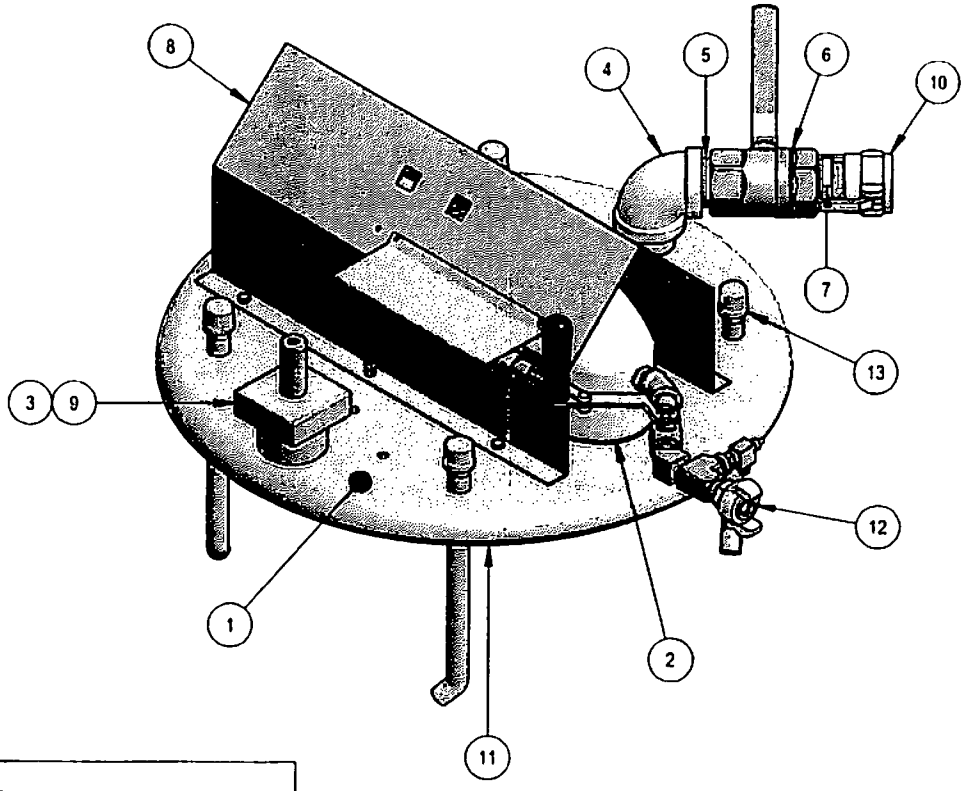

Parts List					
ITEM	QTY	P.N	DESCRIPTION	MATERIAL	WT.
1	1	07-10225	SEDIMENT CHAMBER LID	Stainless Steel	26.51
2	1	08-1004	PRIMARY VACUUM GENERATOR		5.69
3	1	04-10098	VACUUM RELIEF VALVE	Brass	2.30
4	1	03-1001	ELBOW, 1 1/2"	Aluminum	.78
5	1	03-02922	CLOSE NIPPLE, 1 1/2"	Aluminum	.13
6	1	04-10321	BALL VALVE, 1 1/2"	Brass	3.60
7	1	03-1002	BUSHING, 1 1/2" x 1 1/4"	Aluminum	.16
8	1	08-10459	PRIMARY VACUUM COVER SV/SVU SEE FIGURE #6.1		9.06
9	1	07-10339	VACUUM RELIEF VALVE RAIN COVER	Stainless Steel	.33
10	1	04-10335	CAMLOCK, 1 1/4"	Aluminum	.47
11	1	06-1022V	SEDIMENT CHAMBER GASKET	Sponge Rubber	1.28
12	1	08-14025	SV AIR MANIFOLD SEE FIGURE #6.6		2.50
13	4	03-0071S	1/2" PIPE CAP	Stainless Steel	.16

SPOKANE INDUSTRIES PO Box 3303 Spokane, WA. 99220 800-541-3601

Tolerance:except as noted
x/x= 1/8"
.xx= .03"
.xxx= .005"
ANG= 1

SV VACUUM SYSTEM ASSEMBLY

PN: 08-1000 | FIG. #6.5

Drawn: Jay | Date:11/4/2005 | Size: A | Scale: NTS | Sheet 1 of 1

Confidential - Proprietary Information. Reproduction of these drawings or the manufacturing of products from these drawings for use by anyone other than Spokane Metal Products of Spokane, WA. is prohibited without written consent.

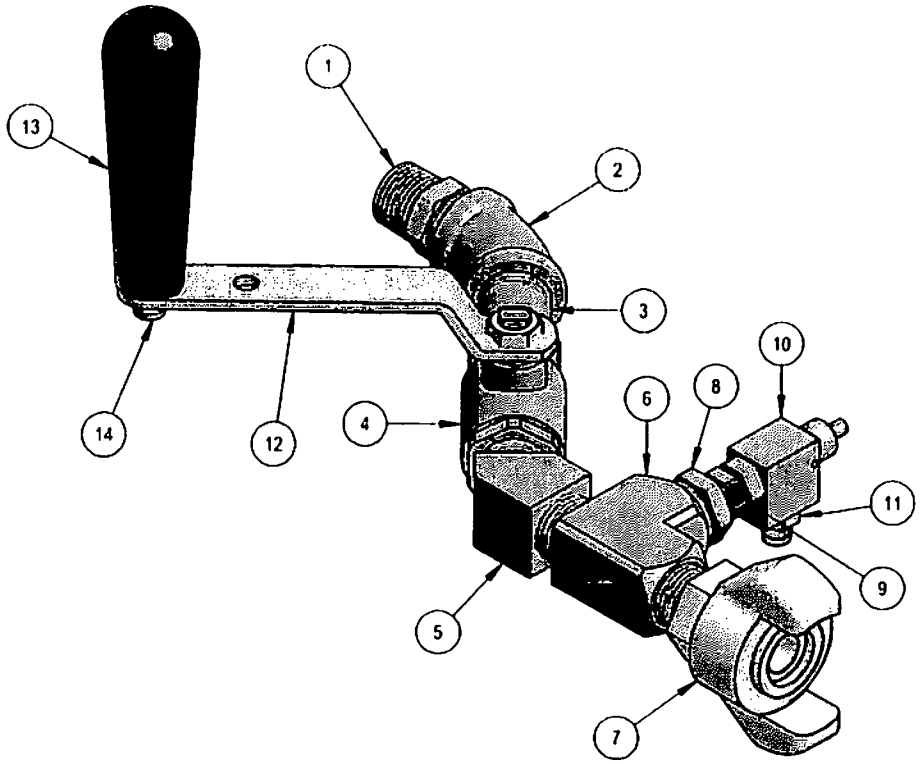

Parts List

ITEM	QTY	P.N.	DESCRIPTION	MATERIAL	WT.
1	1	03-10083	HEX NIPPLE, 1/2"	Brass	.12
2	1	03-10061	ELBOW, 45 DEGREE, 1/2"	Brass	.20
3	1	03-10082	NIPPLE, 1/2" x 2" LG.	Brass	.24
4	1	04-1032	BALL VALVE, 1/2"		.50
5	1	03-10062	STREET ELBOW, 45 DEGREE, 1/2"	Brass	.25
6	1	03-10057	STREET TEE, 1/2"	Brass	.33
7	1	04-1056	AIR CHUCK	Aluminum	.28
8	1	03-10152	BUSHING, 1/2" x 1/4"	Brass	.08
9	1	03-10693	HEX NIPPLE, 1/4" x 1/8"	Brass	.04
10	1	04-10327	BYPASS VALVE	Brass	.17
11	1	03-1075	HOSE ADAPTER, 1/8" x 1/8"	Brass	.03
12	1	01-8359	HANDLE, VALVE	Stainless Steel	.14
13	1	04-10551	HANDLE	Phenolic	.14
14	1	02-1200	NUT, NYLON INSERT, 1/4-20 UNC	Stainless Steel	.01

SPOKANE INDUSTRIES PO Box 3303 Spokane, WA. 99220 800-541-3601

Tolerance:except as noted
x/x= 1/8"
.xx= .03"
.xxx= .005"
ANG= 1

SV AIR MANIFOLD

PN: 08-14025 | FIG. #6.6

Drawn: Jay | Date:11/4/2005 | Size: A | Scale: NTS | Sheet 1 of 1

Confidential - Proprietary Information. Reproduction of these drawings or the manufacturing of products from these drawings for use by anyone other than Spokane Metal Products of Spokane, WA. is prohibited without written consent.

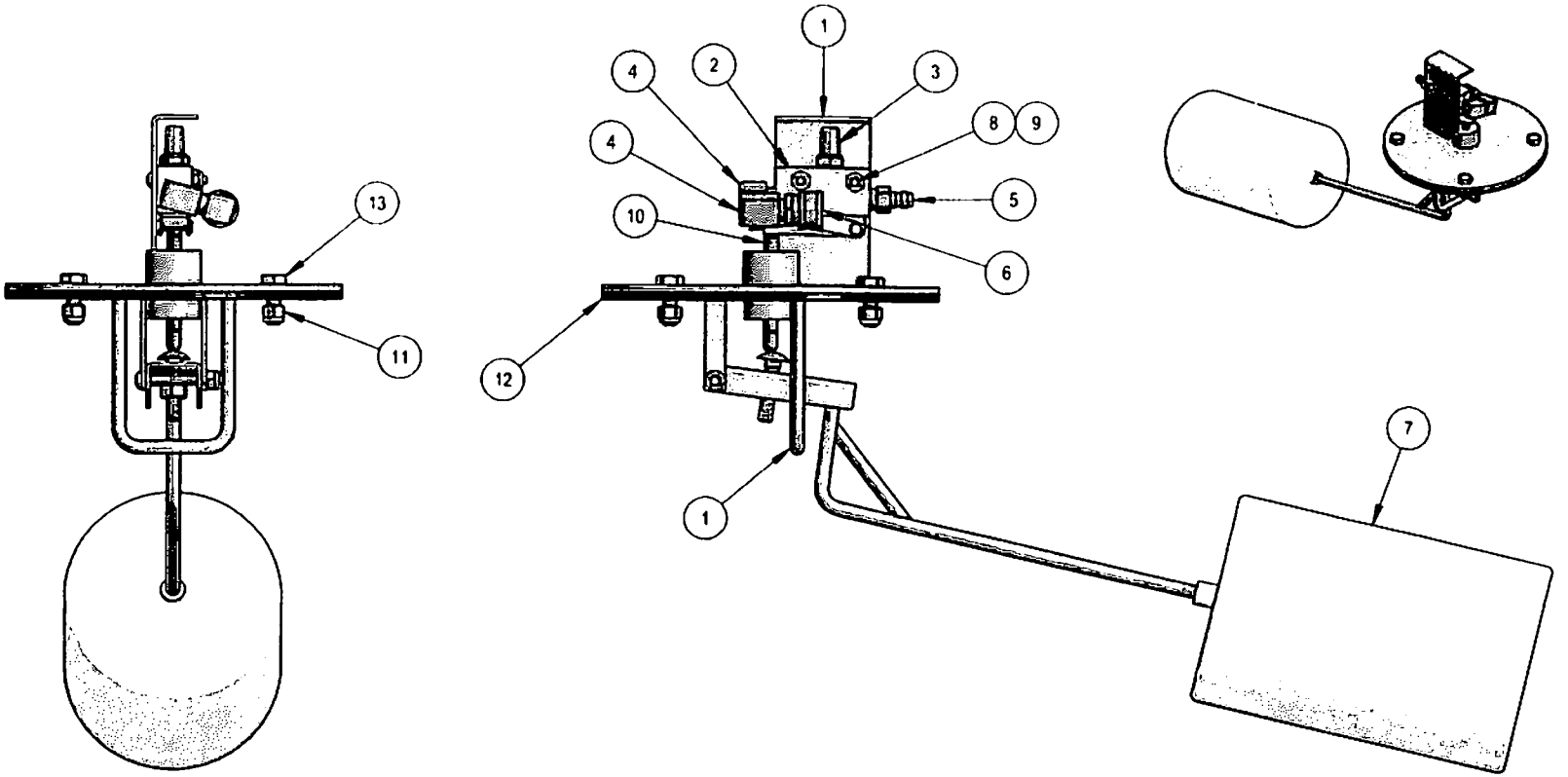

Parts List					
ITEM	QTY	P.N.	DESCRIPTION	MATERIAL	WT.
1	1	08-1801	LEVEL SENSOR ASSEMBLY SEE FIGURE #7.1	Stainless Steel	1.92
2	1	04-10326	VALVE, CYLINDER CONTROL		.23
3	1	03-1076	MUFFLER, 1/8" NPT	Brass	.03
4	2	03-1070	ELBOW, STREET, 1/8" NPT	Brass	.04
5	1	03-1072	PLUG, STRAIGHT THROUGH, 1/8" x 1/8" MNPT	Brass	.03
6	1	03-1073	COUPLER, STRAIGHT THROUGH, 1/8" x 1/8" MNPT	Brass	.06
7	1	06-1013	FLOAT	Plastic	.39
8	2	02-1496	MACHINE SCREW, PAN HEAD PHILLIPS #6-32 x 1" LG.	Stainless Steel	.01
9	2	02-1212	NUT, NYLON INSERT, #6-32	Stainless Steel	.00
10	1	05-0501	OPERATING ROD	Bronze	.04
11	4	02-1200	NUT, NYLON INSERT, 1/4-20 UNC	Stainless Steel	.01
12	1	04-10011	GASKET	Rubber	.06
13	4	02-1497	BOLT, HEX HEAD, 1/4-20 UNC x 3/4" LG.	Stainless Steel	.02

SPOKANE INDUSTRIES PO Box 3303 Spokane, WA. 99220 800-541-3601

Tolerance:except as noted
x/x= 1/8"
.xx= .03"
.xxx= .005"
ANG= 1

AUTO-VAC SHUT OFF

PN: 08-1802 | FIG. #7

Drawn: Jay | Date:10/25/2005 | Size: A | Scale: NTS | Sheet 1 of 1

Confidential - Proprietary Information. Reproduction of these drawings or the manufacturing of products from these drawings for use by anyone other than Spokane Metal Products of Spokane, WA. is prohibited without written consent.

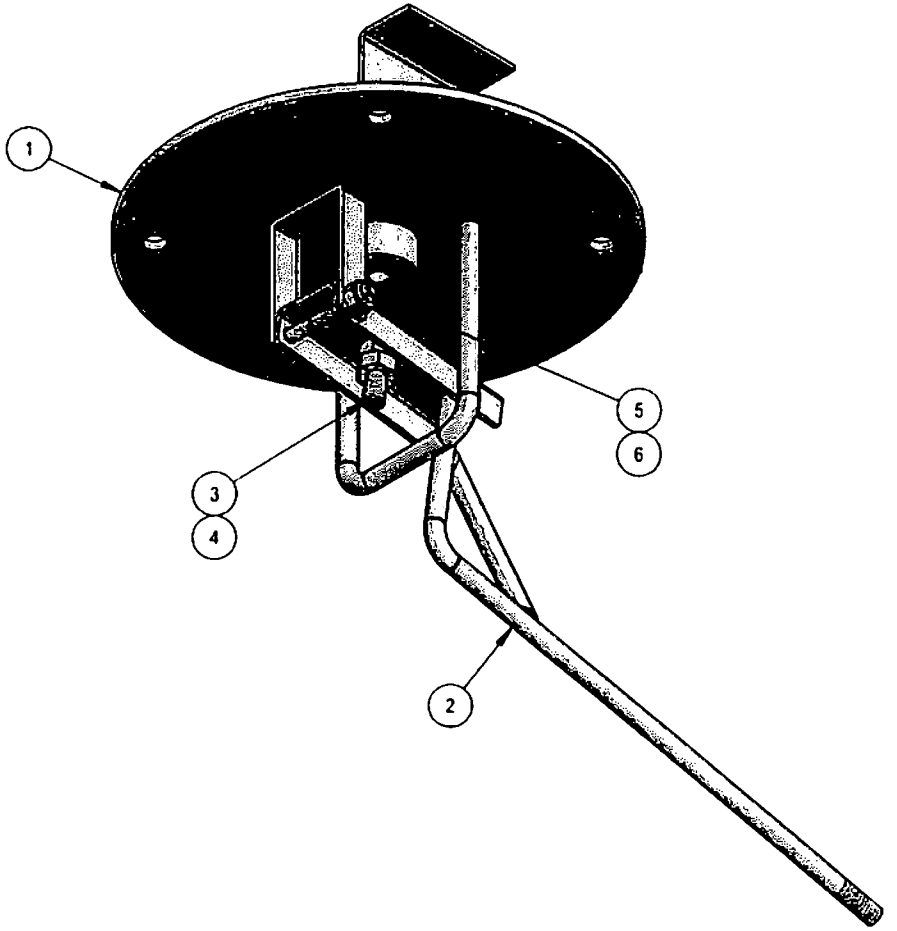

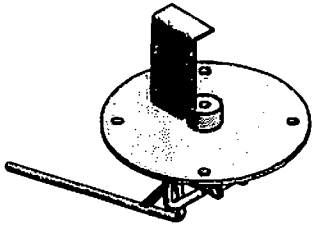

Parts List

ITEM	QTY	P.N.	DESCRIPTION	MATERIAL	WT.
1	1	07-1802	FLOAT ROD MOUNT	Stainless Steel	1.61
2	1	07-1801	FLOAT ROD	Stainless Steel	.26
3	1	02-10002	BOLT, CARRIAGE, 1/4" UNC 1" LG.	Stainless Steel	.02
4	1	02-12140	NUT, 1/4" UNC	Stainless Steel	.01
5	1	02-1495	MACHINE SCREW, PAN HEAD PHILLIPS #8-32 x 1 1/2" LG.	Stainless Steel	.01
6	1	02-1211	NUT, NYLON INSERT, #8-32	Stainless Steel	.01

SPOKANE INDUSTRIES PO Box 3303 Spokane, WA. 99220 800-541-3601

Tolerance:except as noted
x/x= 1/8"
.xx= .03"
.xxx= .005"
ANG= 1

LEVEL SENSOR ASSEMBLY

PN: 08-1801 | FIG. #7.1

Drawn: jay | Date:10/25/2005 | Size: A | Scale: NTS | Sheet 1 of 1

Confidential - Proprietary Information. Reproduction of these drawings or the manufacturing of products from these drawings for use by anyone other than Spokane Metal Products of Spokane, WA. is prohibited without written consent.

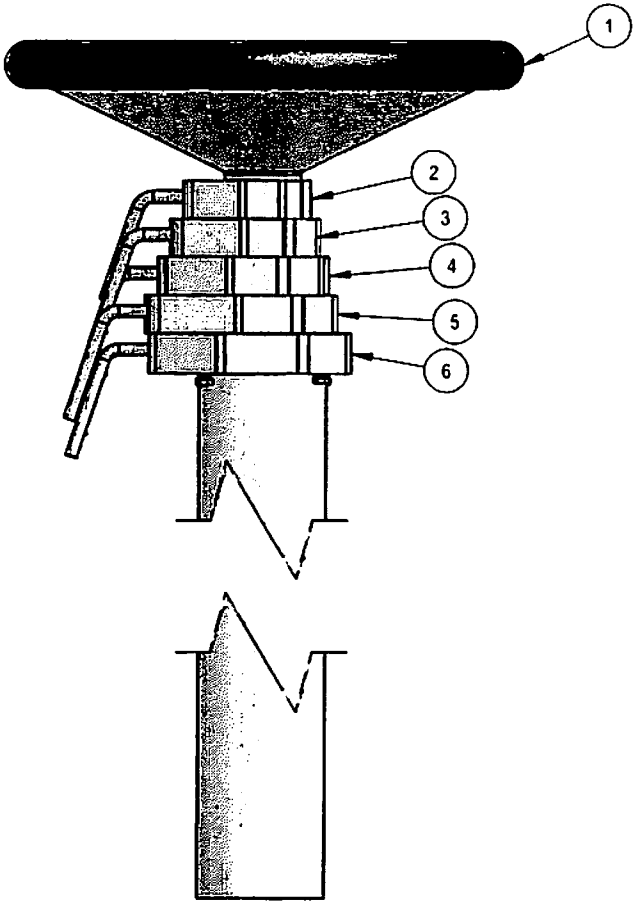

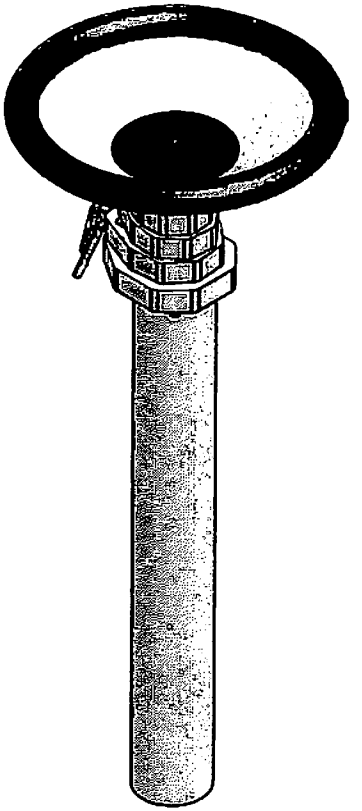

Parts List

ITEM	QTY	P.N.	DESCRIPTION	MATERIAL	WT.
1	1	08-1016U	FUNNEL SECTION SEE FIGURE #8.1		6.25
2	1	08-1017U	2 1/2" TELESCOPING SECTION SEE FIGURE #8.2		2.55
3	1	08-1027U	3" TELESCOPING SECTION SEE FIGURE #8.3		2.94
4	1	08-1028U	3 1/2" TELESCOPING SECTION SEE FIGURE #8.4		3.40
5	1	07-1014U	4" TELESCOPING SECTION SEE FIGURE #8.5		3.82
6	1	05-10302	4" BASE CLAMP SEE FIGURE #8.6		2.09

SPOKANE INDUSTRIES

PO Box 3303 Spokane, WA. 99220 800-541-3601

Tolerance:except as noted
x/x= 1/8"
.xx= .03"
.xxx= .005"
ANG= 1

16' TELESCOPING DRAIN

PN: 08-1034U

FIG. #8

Drawn: jay | Date:1/7/2005 | Size: A | Scale: NTS | Sheet 1 of 1

Confidential - Proprietary Information. Reproduction of these drawings or the manufacturing of products from these drawings for use by anyone other than Spokane Metal Products of Spokane, WA. is prohibited without written consent.

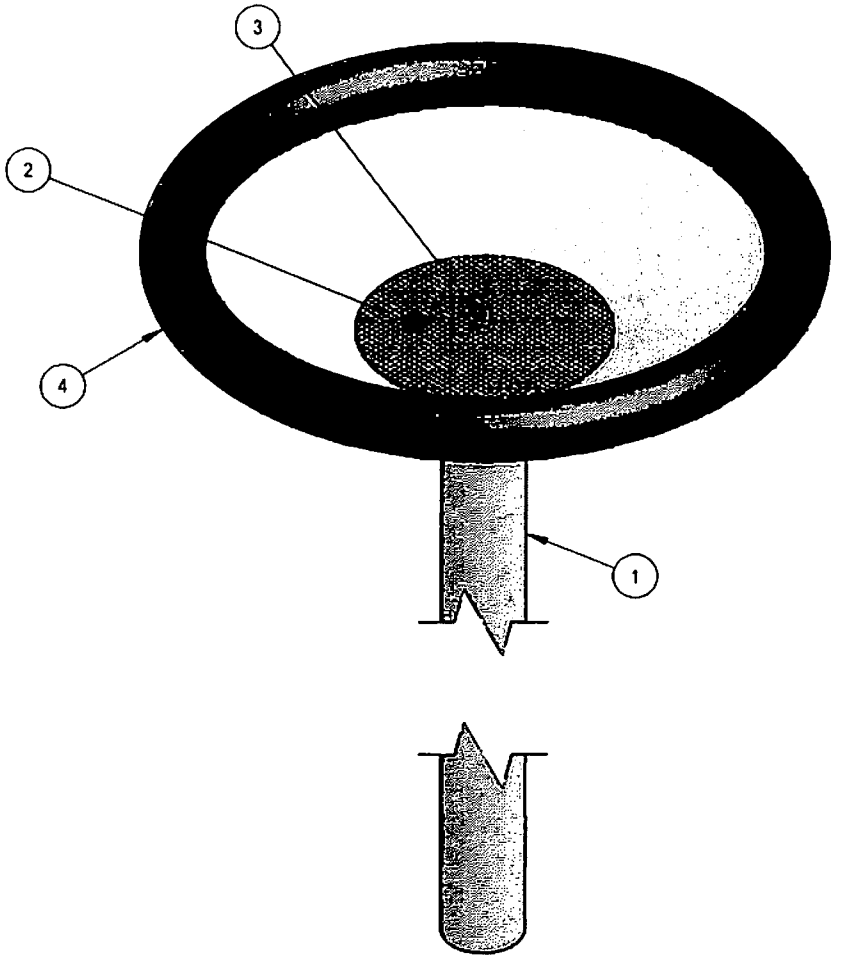

Parts List

ITEM	QTY	P.N.	DESCRIPTION	MATERIAL	WT.
1	1	07-10541	FUNNEL SECTION		5.86
2	1	04-1039	STRAINER	Stainless Steel	.36
3	1	02-1200	NUT, NYLON INSERT, 1/4-20 UNC	Stainless Steel	.01
4	1	06-1022	GASKET	Sponge Rubber	.81

SPOKANE INDUSTRIES PO Box 3303 Spokane, WA. 99220 800-541-3601

Tolerance:except as noted
x/x= 1/8"
.xx= .03"
.xxx= .005"
ANG= 1

FUNNEL SECTION

PN: 08-1016U | FIG. #8.1

Drawn: jay | Date:10/18/2005 | Size: A | Scale: NTS | Sheet 1 of 1

Confidential - Proprietary Information. Reproduction of these drawings or the manufacturing of products from these drawings for use by anyone other than Spokane Metal Products of Spokane, WA. is prohibited without written consent.

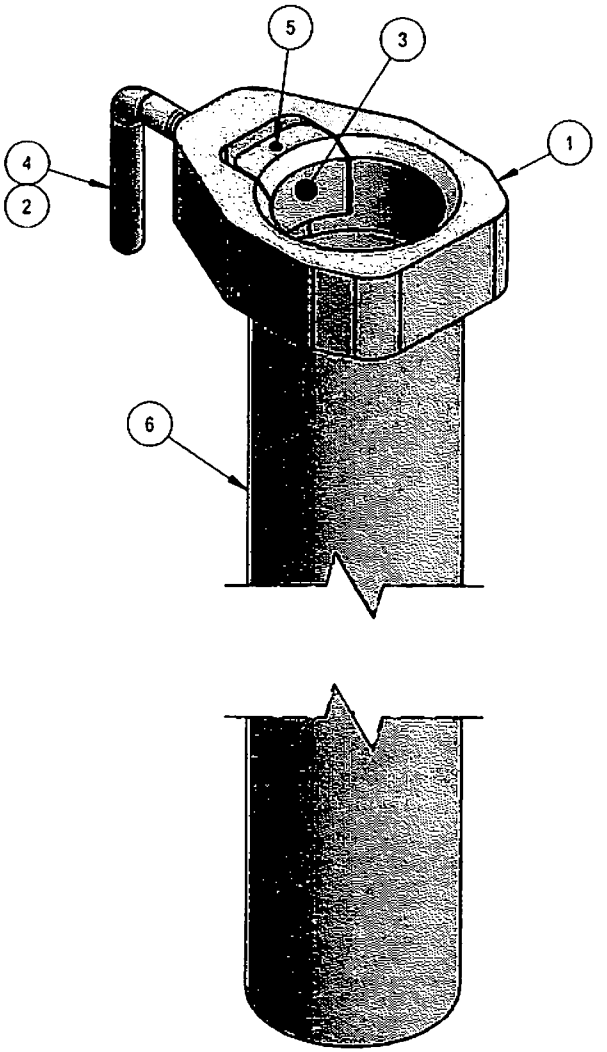

Parts List

ITEM	QTY	P.N.	DESCRIPTION	MATERIAL	WT.
1	1	05-10271	2" CLAMP	Aluminum	.67
2	1	04-0094	HELI-COIL, 3/8"	Stainless Steel	.00
3	1	05-10011	WEDGE	Aluminum	.06
4	1	05-10181	HANDLE	Stainless Steel	.18
5	1	02-1005	SET SCREW, HEX, HALF DOG POINT	Stainless Steel	.00
6	1	01-9242	TUBING, .065" WALL, 2 1/2" x 33 1/2" LG.	Aluminum	1.63

SPOKANE INDUSTRIES PO Box 3303 Spokane, WA. 99220 800-541-3601

Tolerance:except as noted
x/x= 1/8"
.xx= .03"
.xxx= .005"
ANG= 1

2 1/2" TELESCOPING SECTION

PN: 08-1017U | FIG. #8.2

Drawn: jay | Date:12/7/2004 | Size: A | Scale: NTS | Sheet 1 of 1

Confidential - Proprietary Information. Reproduction of these drawings or the manufacturing of products from these drawings for use by anyone other than Spokane Metal Products of Spokane, WA. is prohibited without written consent.

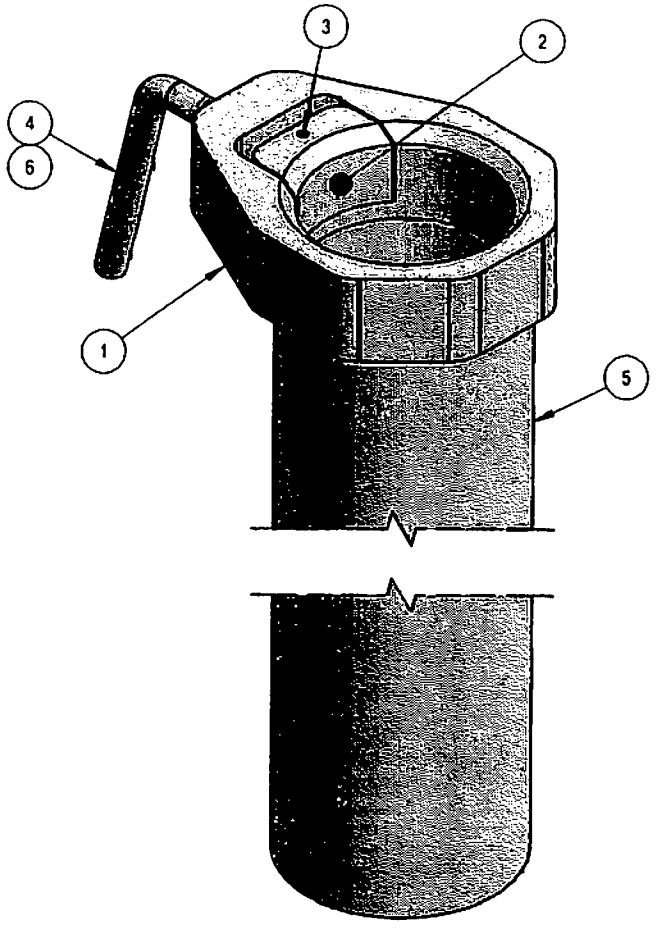

Parts List

ITEM	QTY	P.N.	DESCRIPTION	MATERIAL	WT.
1	1	05-10281	2 1/2" CLAMP	Aluminum	.75
2	1	05-10021	WEDGE, CLAMP, 2 1/2"	Aluminum	.09
3	1	02-1005	SET SCREW, HEX, HALF DOG POINT	Stainless Steel	.00
4	1	05-10181	HANDLE	Stainless Steel	.18
5	1	01-92452	TUBE, 3" x .065" WALL x 32 1/2" LG.	Aluminum	1.91
6	1	04-0094	HELI-COIL, 3/8"	Stainless Steel	.00

SPOKANE INDUSTRIES PO Box 3303 Spokane, WA. 99220 800-541-3601

Tolerance:except as noted
x/x= 1/8"
.xx= .03"
.xxx= .005"
ANG= 1

3" TELESCOPING SECTION

PN: 08-1027U | FIG. #8.3

Drawn: jay | Date:12/9/2004 | Size: A | Scale: NTS | Sheet 1 of 1

Confidential - Proprietary Information. Reproduction of these drawings or the manufacturing of products from these drawings for use by anyone other than Spokane Metal Products of Spokane, WA. is prohibited without written consent.

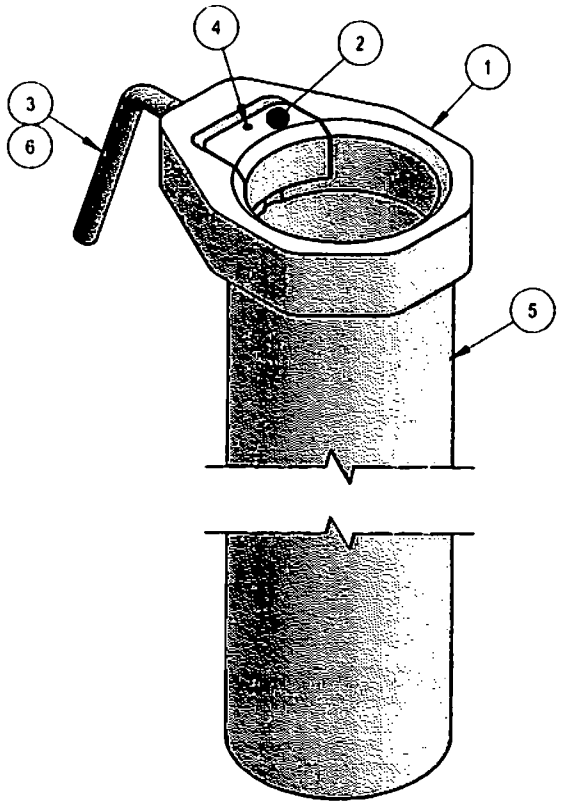

Parts List

ITEM	QTY	P.N.	DESCRIPTION	MATERIAL	WT.
1	1	05-10291	3" CLAMP	Aluminum	.91
2	1	05-10031	WEDGE	Aluminum	.14
3	1	05-10181	HANDLE	Stainless Steel	.18
4	1	02-1005	SET SCREW, HEX, HALF DOG POINT	Stainless Steel	.00
5	1	01-9248	3 1/2" TUBE 31 1/2" LG.	Aluminum	2.16
6	1	04-0094	HELI-COIL, 3/8"	Stainless Steel	.00

SPOKANE INDUSTRIES PO Box 3303 Spokane, WA. 99220 800-541-3601

Tolerance:except as noted
x/x=± 1/8"
.xx=± .03"
.xxx=± .005"
ANG=± 1°

3 1/2" TELESCOPING SECTION

PN: 08-1028U | FIG #8.4

Drawn: jay | Date:12/1/2005 | Size: A | Scale: NTS | Sheet 1 of 1

Confidential - Proprietary Information. Reproduction of these drawings or the manufacturing of products from these drawings for use by anyone other than Spokane Metal Products of Spokane, WA. is prohibited without written consent.

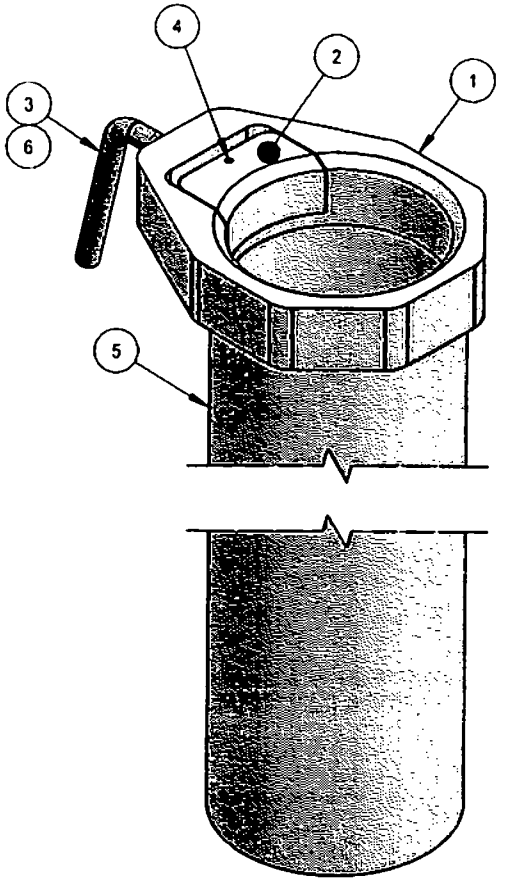

Parts List

ITEM	QTY	P.N.	DESCRIPTION	MATERIAL	WT.
1	1	05-10301	3 1/2" CLAMP	Aluminum	1.04
2	1	05-10041	WEDGE	Aluminum	.19
3	1	05-10181	HANDLE	Stainless Steel	.18
4	1	02-1005	SET SCREW, HEX, HALF DOG POINT	Stainless Steel	.00
5	1	01-9259	4" TUBE x 30 1/2" LG.	Aluminum	2.40
6	1	04-0094	HELI-COIL, 3/8"	Stainless Steel	.00

SPOKANE INDUSTRIES PO Box 3303 Spokane, WA. 99220 800-541-3601

Tolerance:except as noted
x/x=± 1/8"
.xx=± .03"
.xxx=± .005"
ANG=± 1°

Drawn: jay

4" TELESCOPING SECTION

PN: 07-1014U

FIG. #8.5

Date:12/1/2005 | Size: A | Scale: NTS | Sheet 1 of 1

Confidential - Proprietary Information. Reproduction of these drawings or the manufacturing of products from these drawings for use by anyone other than Spokane Metal Products of Spokane, WA. is prohibited without written consent.

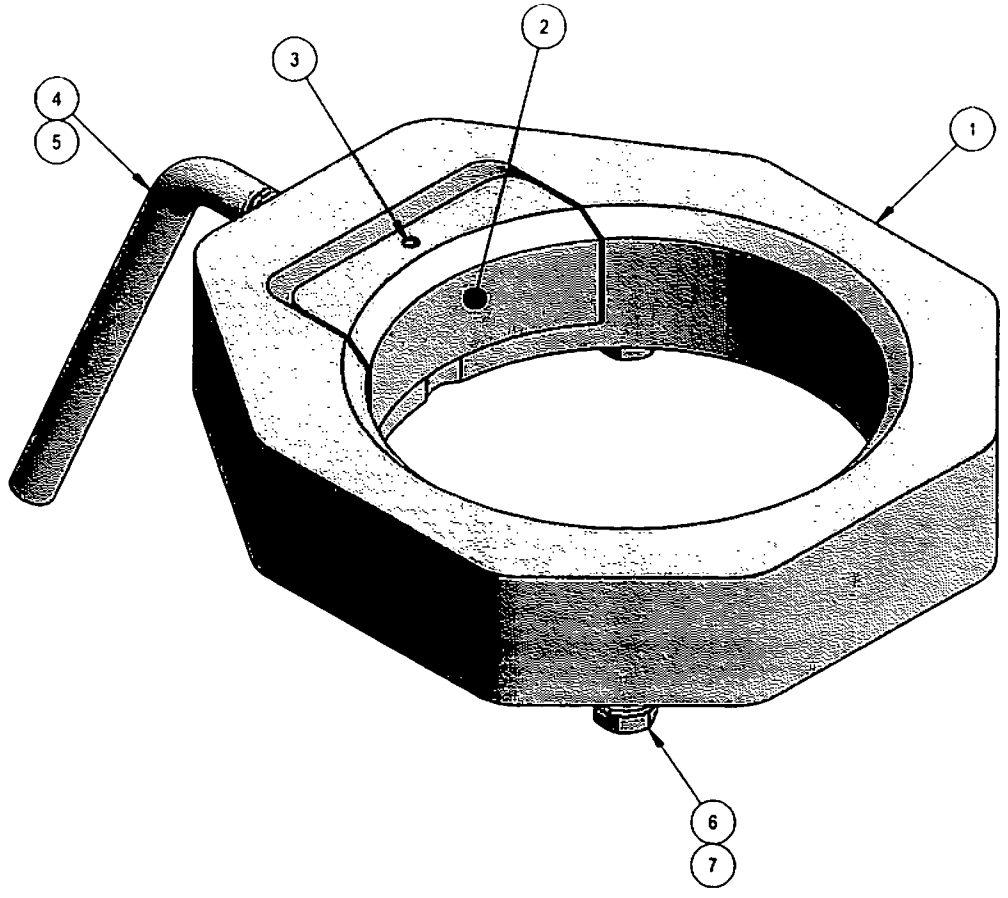

Parts List					
ITEM	QTY	P.N.	DESCRIPTION	MATERIAL	WT.
1	1	05-10302	CLAMP	Aluminum	1.74
2	1	05-10051	WEDGE	Aluminum	.16
3	1	02-1005	SET SCREW, HEX, HALF DOG POINT	Stainless Steel	.00
4	1	05-10181	HANDLE	Stainless Steel	.18
5	1	04-0094	HELI-COIL, 3/8"	Stainless Steel	.00
6	4	02-10010	BOLT, 1/4" UNC x 5/8" LG.	Stainless Steel	.02
7	4	02-11001	LOCK WASHER, 1/4"	Stainless Steel	.00

SPOKANE INDUSTRIES PO Box 3303 Spokane, WA. 99220 800-541-3601

Tolerance:except as noted
x/x= 1/8"
.xx= .03"
.xxx= .005"
ANG= 1

4" BASE CLAMP

PN: 05-10302 | FIG. #8.6

Drawn: jay | Date:1/5/2005 | Size: A | Scale: NTS | Sheet 1 of 1

Confidential - Proprietary Information. Reproduction of these drawings or the manufacturing of products from these drawings for use by anyone other than Spokane Metal Products of Spokane, WA. is prohibited without written consent.

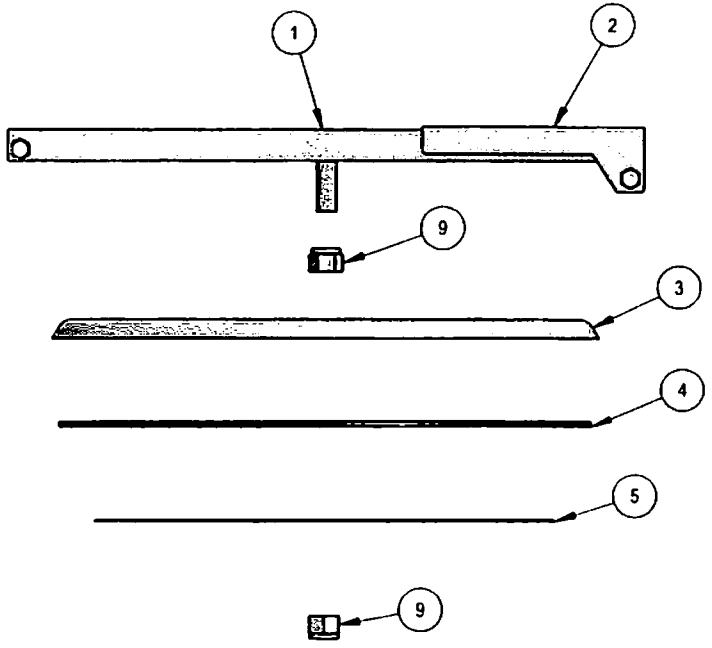

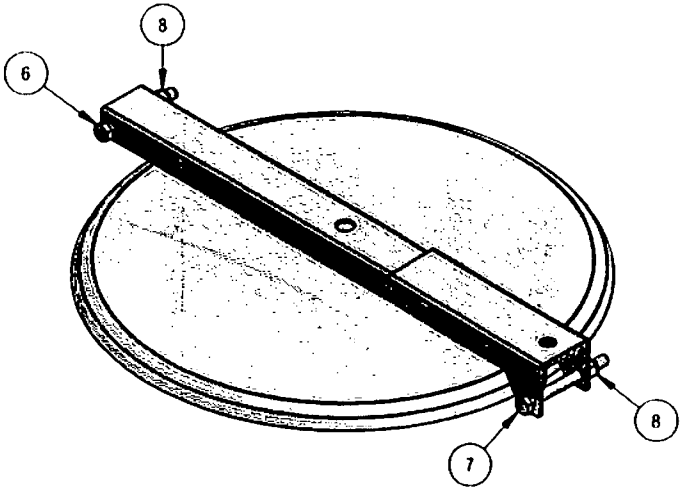

Parts List

ITEM	QTY	P.N.	DESCRIPTION	MATERIAL	WT.
1	1	07-1039S	CROSS ARM	Stainless Steel	2.35
2	1	01-8222S	FLIP LOCK	Stainless Steel	.86
3	1	01-86002	SV & SVU MANWAY LID	Stainless Steel	9.60
4	1	06-25025	MANWAY GASKET	Rubber	1.39
5	1	07-2303	GASKET RETAINER	Aluminum	.97
6	1	02-10013	HEX CAP SCREW, 3/8" UNC 3" LG	Stainless Steel	.12
7	1	02-10014	HEX CAP SCREW, 3/8" UNC 3 1/2" LG.	Stainless Steel	.13
8	2	02-1202	NUT, NYLON INSERT 3/8" UNC	Stainless Steel	.03
9	2	02-20611S	NUT, NYLON INSERT 5/8" UNF	Stainless Steel	.11

SPOKANE INDUSTRIES PO Box 3303 Spokane, WA. 99220 800-541-3601

Tolerance:except as noted
x/x= 1/8"
.xx= .03"
.xxx= .005"
ANG= 1

CROSS ARM & LID ASSEMBLY

PN: 08-10251 | FIG. #9

Drawn: jay | Date:10/25/2005 | Size: A | Scale: NTS | Sheet 1 of 1

Confidential - Proprietary Information. Reproduction of these drawings or the manufacturing of products from these drawings for use by anyone other than Spokane Metal Products of Spokane, WA. is prohibited without written consent.

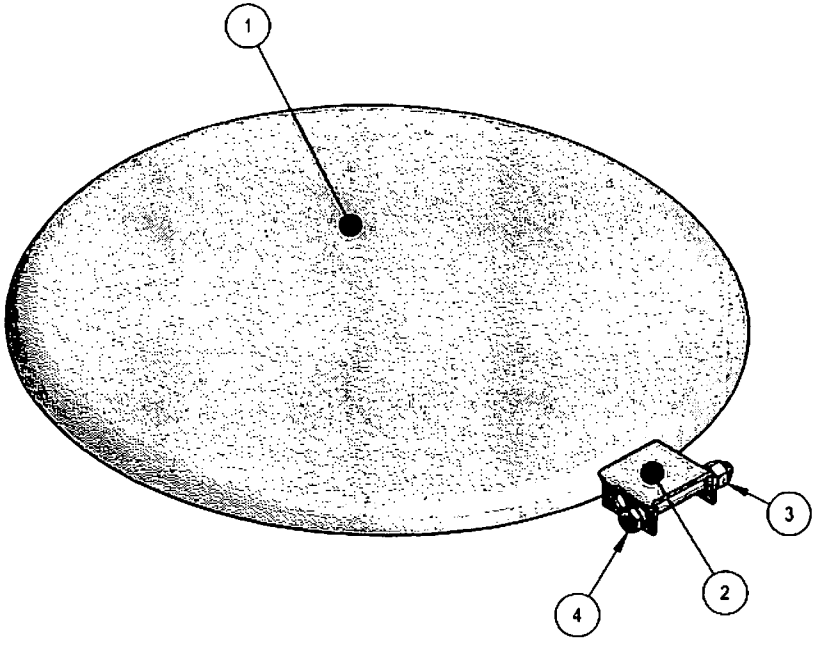

Parts List

ITEM	QTY	P.N.	DESCRIPTION	MATERIAL	WT.
1	1	01-86001	LID	Stainless Steel	7.50
2	1	01-82225	HINGE MOUNT BRACKET	Stainless Steel	.17
3	1	02-1202	NUT, NYLON INSERT 3/8" UNC	Stainless Steel	.03
4	1	02-10013	HEX CAP SCREW, 3/8" UNC 3" LG	Stainless Steel	.12

SPOKANE INDUSTRIES

PO Box 3303 Spokane, WA. 99220 800-541-3601

Tolerance:except as noted
x/x= 1/8"
.xx= .03"
.xxx= .005"
ANG= 1

FUNNEL COVER

PN: 08-10261

FIG. #10

Drawn: jay | Date:10/25/2005 | Size: A | Scale: NTS | Sheet 1 of 1

Confidential - Proprietary Information. Reproduction of these drawings or the manufacturing of products from these drawings for use by anyone other than Spokane Metal Products of Spokane, WA. is prohibited without written consent.

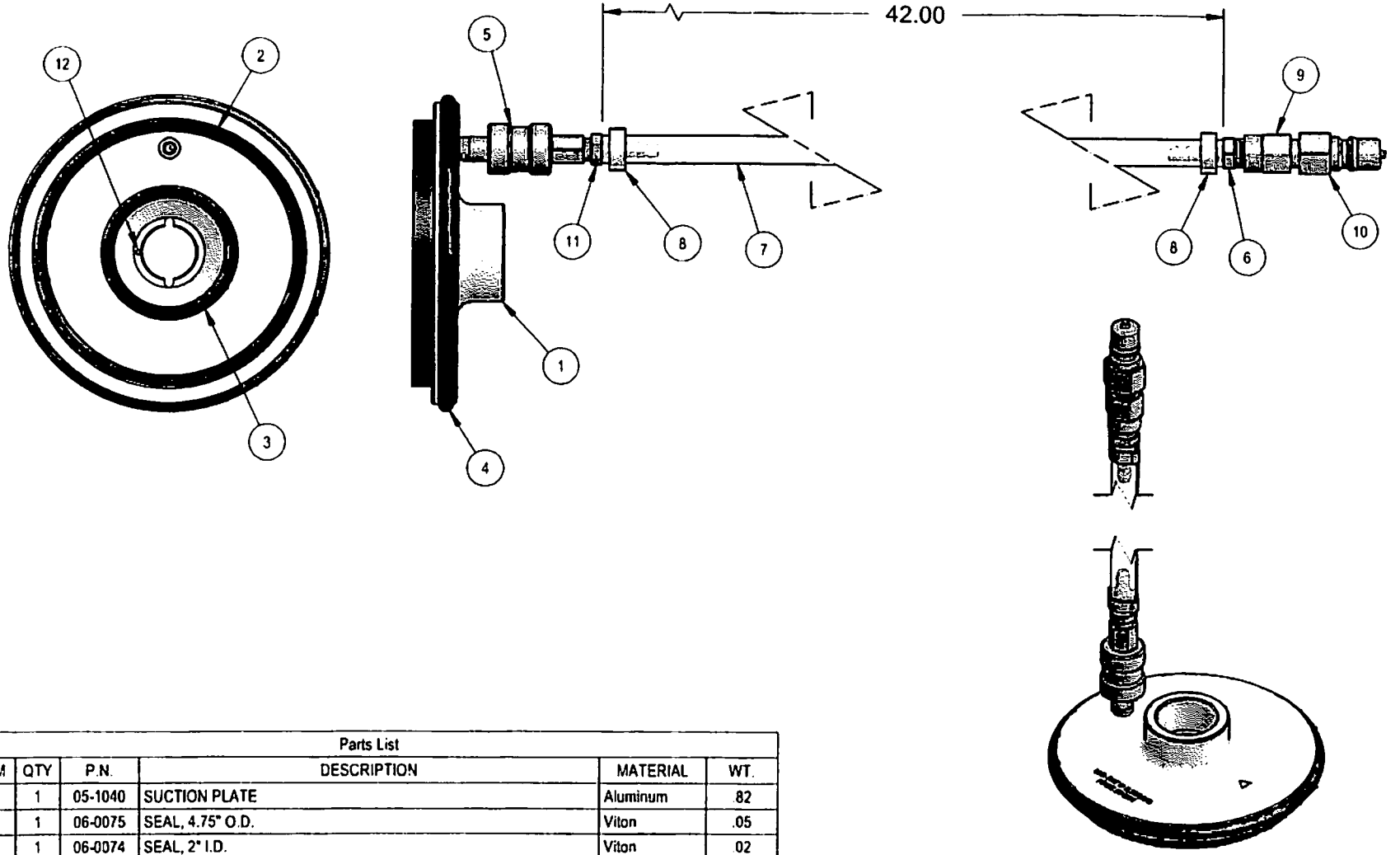

Parts List					
ITEM	QTY	P.N.	DESCRIPTION	MATERIAL	WT.
1	1	05-1040	SUCTION PLATE	Aluminum	.82
2	1	06-0075	SEAL, 4.75" O.D.	Viton	.05
3	1	06-0074	SEAL, 2" I.D.	Viton	.02
4	1	06-00688	BUMPER	Rubber	.03
5	1	04-10325	SLIDE VALVE, 1/8" 250#	Brass	.23
6	1	03-11133	HOSE BARB, 1/4" NPT x 1/4" BARB	Brass	.05
7	1	06-2526	TUBING, 1/4" x 1/2" #510	Vinyl	.27
8	2	03-10105	CLAMP, OETIKER, 1/2"	Stainless Steel	.01
9	1	04-10099	CHECK VALVE	Brass	.07
10	1	03-111397	MALE QUICK-CONNECT, 1/4"	Brass	.12
11	1	03-111334	HOSE BARB, 1/8" NPT x 1/4" BARB	Brass	.03
12	1	02-1350	ROLL PIN, 3/32" x 1/4" LG.	Stainless Steel	.00

SPOKANE INDUSTRIES PO Box 3303 Spokane, WA. 99220 800-541-3601

Tolerance:except as noted
x/x= 1/8"
.xx= .03"
.xxx= .005"
ANG= 1

SealVac Standard Suction Plate Assembly

PN: 08-0200 | FIG. #11

Drawn: jay | Date:9/9/2005 | Size: A | Scale: NTS | Sheet 1 of 1

Confidential - Proprietary Information. Reproduction of these drawings or the manufacturing of products from these drawings for use by anyone other than Spokane Metal Products of Spokane, WA. is prohibited without written consent.

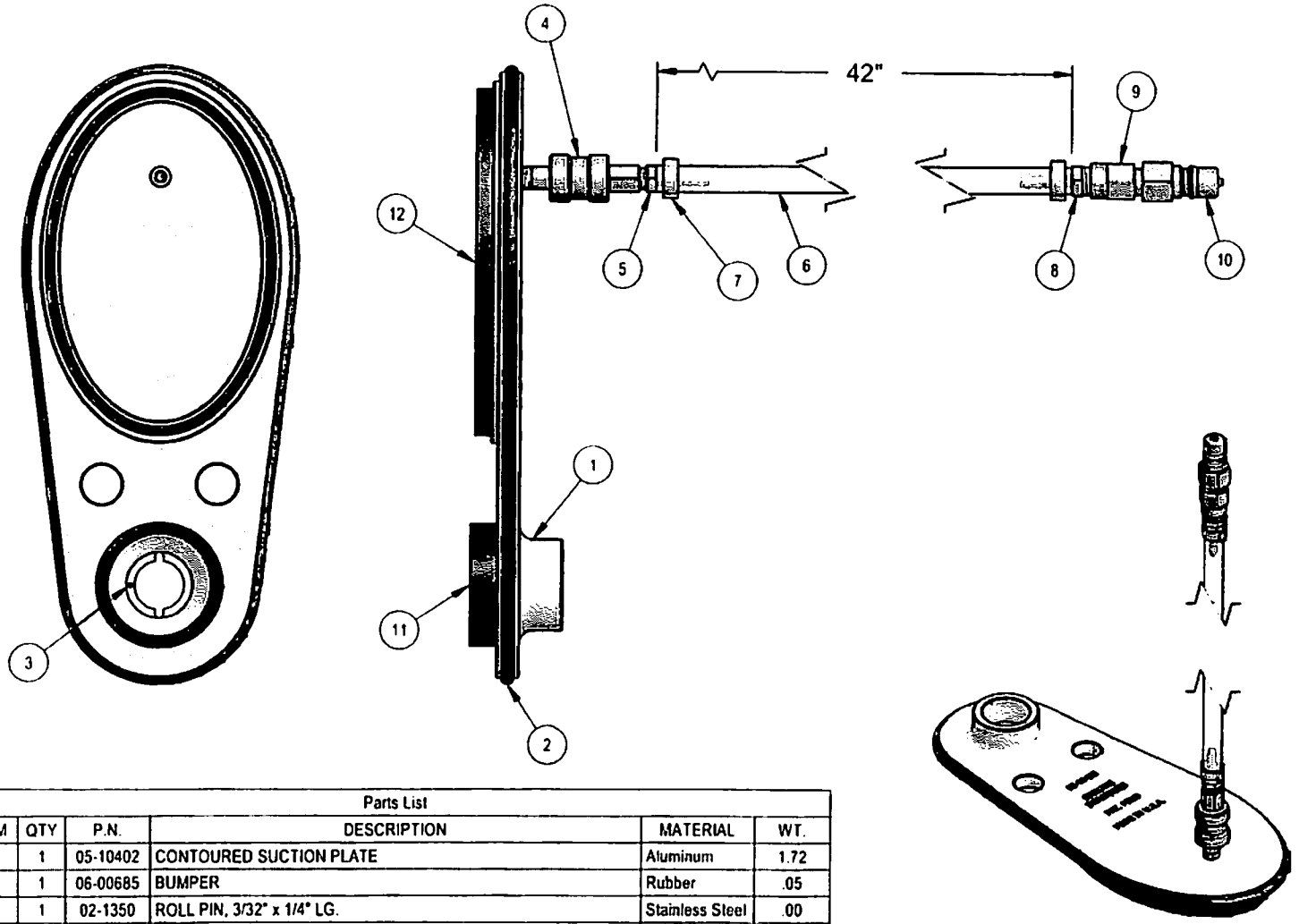

Parts List					
ITEM	QTY	P.N.	DESCRIPTION	MATERIAL	WT.
1	1	05-10402	CONTOURED SUCTION PLATE	Aluminum	1.72
2	1	06-00685	BUMPER	Rubber	.05
3	1	02-1350	ROLL PIN, 3/32" x 1/4" LG.	Stainless Steel	.00
4	1	04-10325	SLIDE VALVE, 1/8" 250#	Brass	.23
5	1	03-111334	HOSE BARB, 1/8" NPT x 1/4" BARB	Brass	.03
6	1	06-2526	TUBING, 1/4" x 1/2" #510	Vinyl	.27
7	2	03-10105	CLAMP, OETIKER, 1/2"	Stainless Steel	.01
8	1	03-11133	HOSE BARB, 1/4" NPT x 1/4" BARB	Brass	.05
9	1	04-10099	CHECK VALVE	Brass	.07
10	1	03-111397	MALE QUICK-CONNECT, 1/4"	Brass	.12
11	1	06-0073	HUB SEAL	Rubber	.02
12	1	06-0077	SEAL, CONTOURED SUCTION PLATE	Viton	.05

SPOKANE INDUSTRIES PO Box 3303 Spokane, WA. 99220 800-541-3601

Tolerance:except as noted
x/x= 1/8"
.xx= .03"
.xxx= .005"
ANG= 1

Contoured Suction Plate Assembly

PN: 08-0300 | FIG. #12

Drawn: Jay | Date:9/13/2005 | Size: A | Scale: NTS | Sheet 1 of 1

Confidential - Proprietary Information. Reproduction of these drawings or the manufacturing of products from these drawings for use by anyone other than Spokane Metal Products of Spokane, WA. is prohibited without written consent.

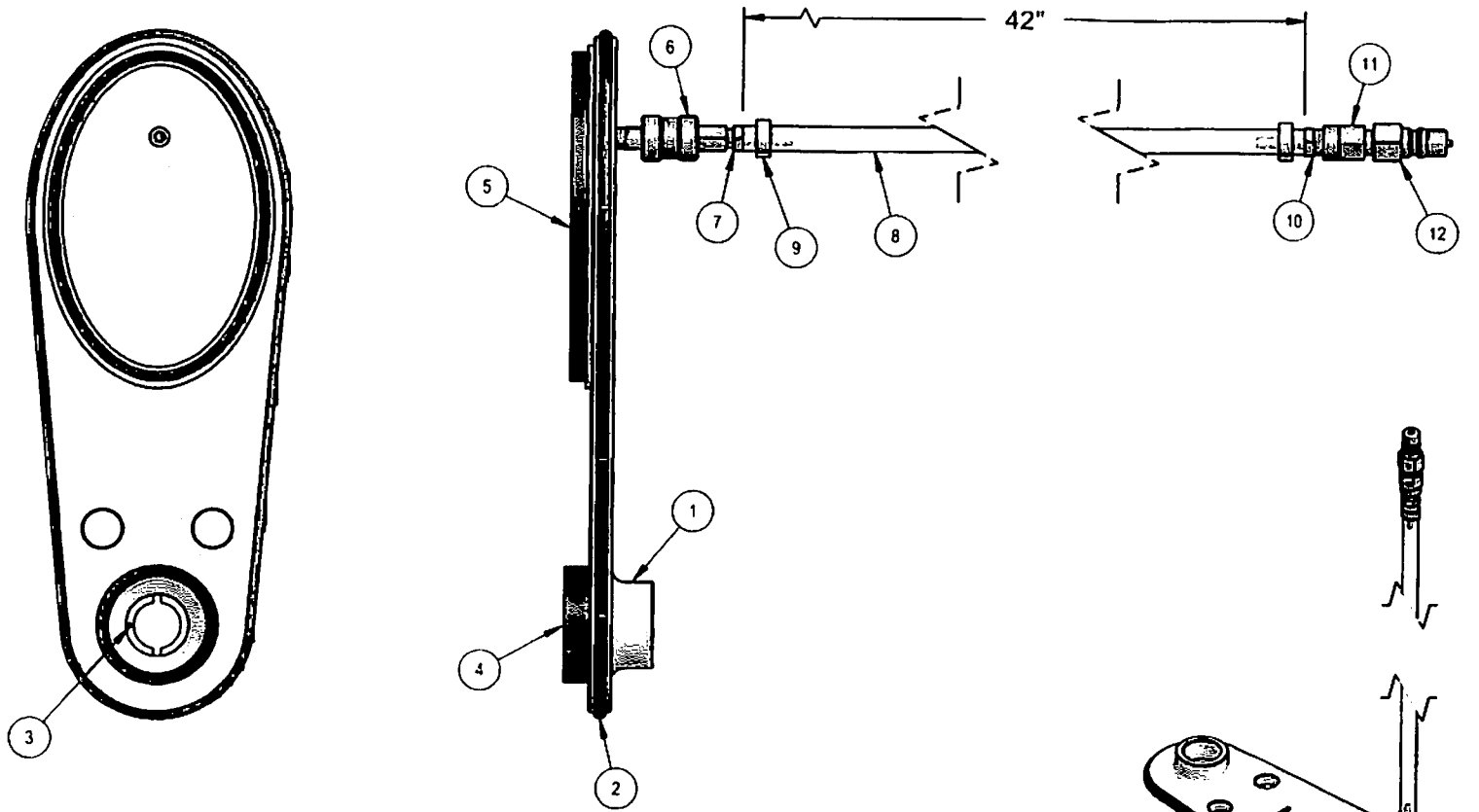

Parts List					
ITEM	QTY	P.N	DESCRIPTION	MATERIAL	WT.
1	1	05-10404	CONTOURED SUCTION PLATE	Aluminum	2.07
2	1	06-00686	BUMPER	Rubber	.05
3	1	02-1350	ROLL PIN, 3/32" x 1/4" LG.	Stainless Steel	.00
4	1	06-0073	HUB SEAL	Rubber	.02
5	1	06-0077	SEAL, CONTOURED SUCTION PLATE	Viton	.05
6	1	04-10325	SLIDE VALVE, 1/8" 250#		.23
7	1	03-111334	HOSE BARB, 1/8" NPT x 1/4" BARB	Brass	.03
8	1	06-2526	TUBING, 1/4" x 1/2" #510	Vinyl	.27
9	2	03-10105	CLAMP, OETIKER, 1/2"	Stainless Steel	.01
10	1	03-11133	HOSE BARB, 1/4" NPT x 1/4" BARB	Brass	.05
11	1	04-10099	CHECK VALVE	Brass	.07
12	1	03-111397	MALE QUICK-CONNECT, 1/4"	Brass	.12

SPOKANE INDUSTRIES PO Box 3303 Spokane, WA. 99220 800-541-3601

Tolerance:except as noted
x/x= 1/8"
.xx= .03"
.xxx= .005"
ANG= 1

ELONGATED CONTOURED SUCTION PLATE

PN: 08-0310 | FIG. #13

Drawn: jay | Date:10/27/2005 | Size: A | Scale: NTS | Sheet 1 of 1

Confidential - Proprietary Information. Reproduction of these drawings or the manufacturing of products from these drawings for use by anyone other than Spokane Metal Products of Spokane, WA. is prohibited without written consent.

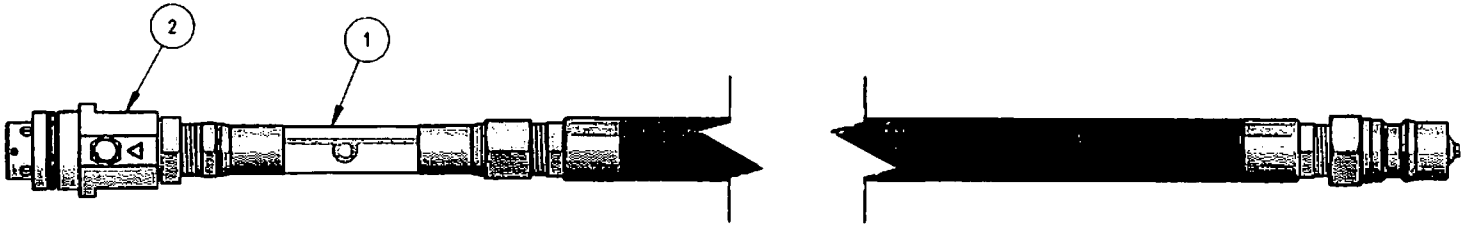

Parts List

ITEM	QTY	P.N.	DESCRIPTION	MATERIAL	WT.
1	1	08-1050	HOSE, PROBE PIGTAIL		1.93
2	1	08-0100	DE-FUELING PROBE		.20

SPOKANE INDUSTRIES PO Box 3303 Spokane, WA. 99220 800-541-3601

Tolerance:except as noted
x/x=± 1/8"
.xx=± .03"
.xxx=± .005"
ANG=± 1'

PROBE & PIGTAIL ASSEMBLY

PN: 08-0150 | FIG. #14

Drawn: jay | Date:11/30/2005 | Size: A | Scale: NTS | Sheet 1 of 1

Confidential - Proprietary Information. Reproduction of these drawings or the manufacturing of products from these drawings for use by anyone other than Spokane Metal Products of Spokane, WA. is prohibited without written consent.

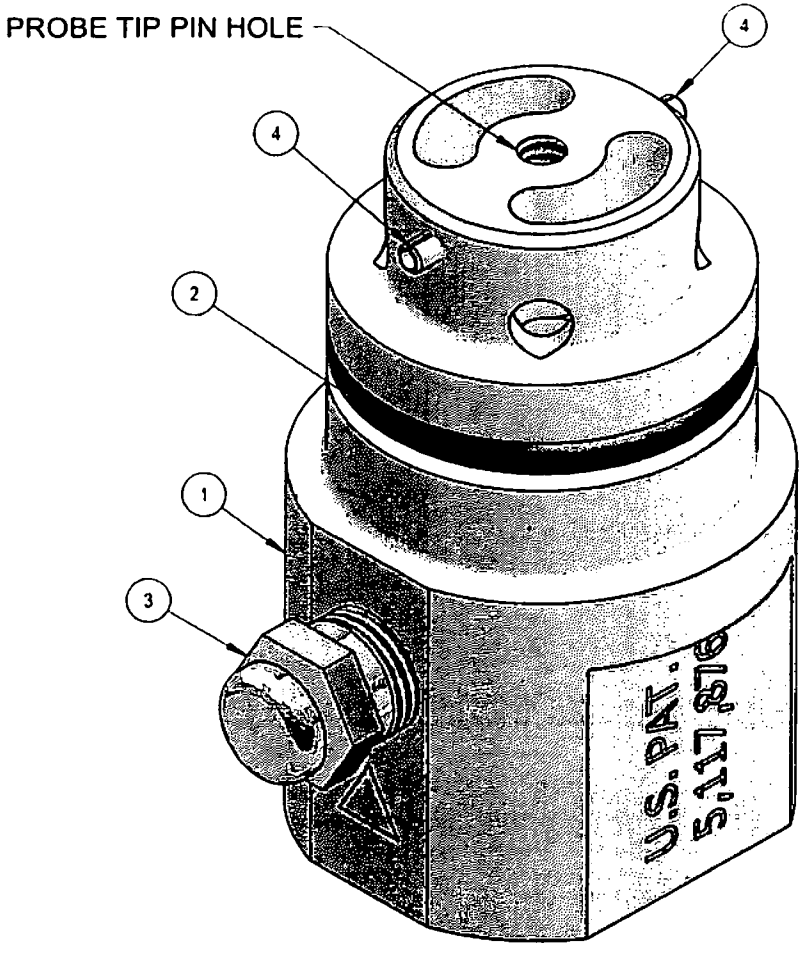

Parts List

ITEM	QTY	P.N.	DESCRIPTION	MATERIAL	WT.
1	1	05-1037R	PROBE	Aluminum	.17
2	1	06-00684	O-RING	Rubber	.00
3	1	04-10328	VACUUM RELIEF VALVE	Brass	.03
4	2	02-1350	ROLL PIN, 3/32" x 1/4" LG.	Stainless Steel	.00

SPOKANE INDUSTRIES PO Box 3303 Spokane, WA. 99220 800-541-3601

Tolerance:except as noted
x/x= 1/8"
.xx= .03"
.xxx= .005"
ANG= 1

DE-FUELING PROBE

PN: 08-0100 | FIG. #15

Drawn: jay | Date:10/17/2005 | Size: A | Scale: NTS | Sheet 1 of 1

Confidential - Proprietary Information. Reproduction of these drawings or the manufacturing of products from these drawings for use by anyone other than Spokane Metal Products of Spokane, WA. is prohibited without written consent.

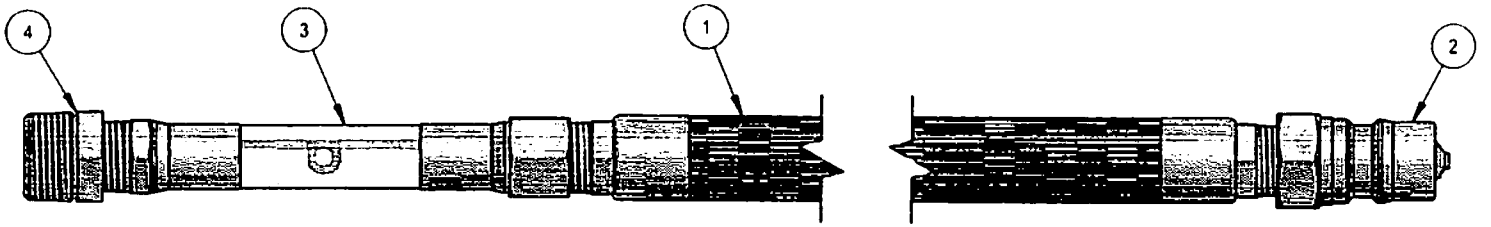

Parts List

ITEM	QTY	P.N.	DESCRIPTION	MATERIAL	WT.
1	1	06-101660	HOSE, 1/2" DEFUELING		1.19
2	1	03-111395	QUICK DISCONNECT, 1/2"	Brass	.29
3	1	04-0750	SIGHT WINDOW		.32
4	1	03-10155	BUSHING, 3/4" x 1/2"	Brass	.13

SPOKANE INDUSTRIES PO Box 3303 Spokane, WA. 99220 800-541-3601

Tolerance:except as noted
x/x= 1/8"
.xx= .03"
.xxx= .005"
ANG= 1

HOSE, PROBE PIGTAIL

PN: 08-1050 | FIG. #16

Drawn: jay | Date:9/22/2005 | Size: A | Scale: NTS | Sheet 1 of 1

Confidential - Proprietary Information. Reproduction of these drawings or the manufacturing of products from these drawings for use by anyone other than Spokane Metal Products of Spokane, WA. is prohibited without written consent.

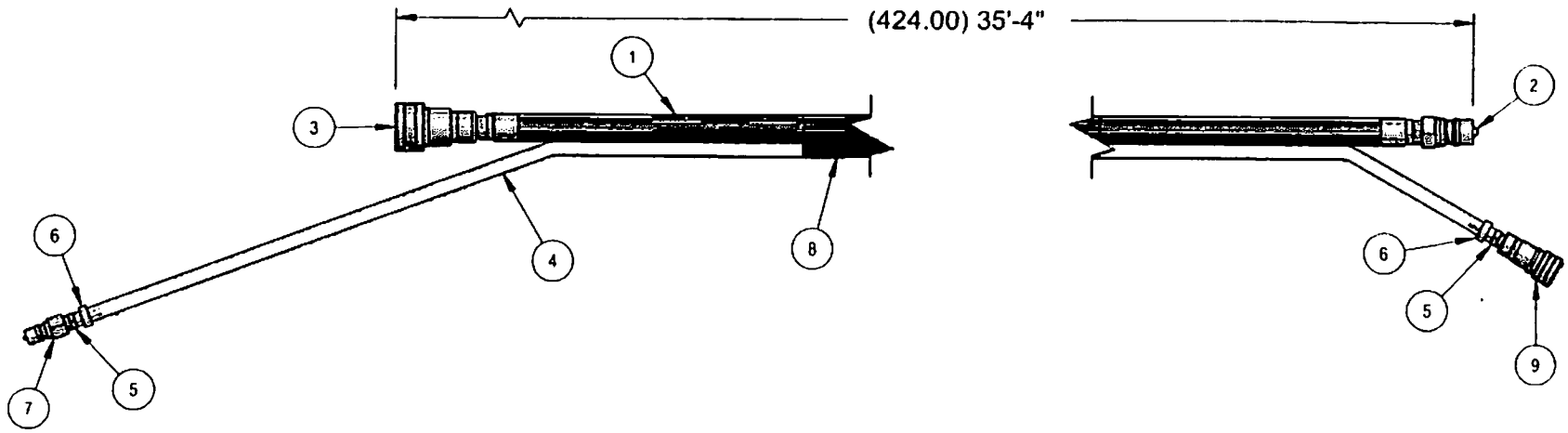

Parts List					
ITEM	QTY	P.N.	DESCRIPTION	MATERIAL	WT.
1	1	06-101662	DEFUELING HOSE, 1/2" x 35' LG.		8.75
2	1	03-111395	QUICK DISCONNECT, 1/2"	Brass	.29
3	1	03-111394	FEMALE QUICK CONNECT, 1/2"	Brass	.98
4	1	06-2526	TUBING, 1/4" x 1/2" x 438" LG.	PVC	3.26
5	2	03-11133	HOSE BARB, 1/4" NPT x 1/4" BARB	Brass	.05
6	2	03-10105	CLAMP, OETIKER, 1/2"	Stainless Steel	.01
7	1	03-111397	MALE QUICK-CONNECT, 1/4"	Brass	.12
8	1	06-10165	HEAT SHRINK TUBING, 2" x 396" LG.	PVC	1.20
9	1	03-111398	FEMALE QUICK-CONNECT, 1/4"	Brass	.35

SPOKANE INDUSTRIES PO Box 3303 Spokane, WA. 99220 800-541-3601

Tolerance:except as noted
x/x= 1/8"
.xx= .03"
.xxx= .005"
ANG= 1

SHIELDED DUPLEX HOSE

PN: 08-0025 | FIG. #17

Drawn: jay | Date:10/19/2005 | Size: A | Scale: NTS | Sheet 1 of 1

Confidential - Proprietary Information. Reproduction of these drawings or the manufacturing of products from these drawings for use by anyone other than Spokane Metal Products of Spokane, WA. is prohibited without written consent.

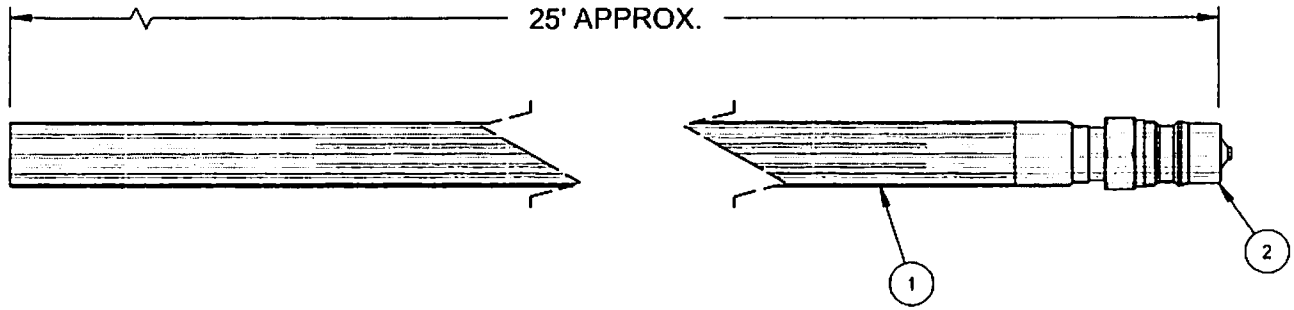

Parts List

ITEM	QTY	P.N.	DESCRIPTION	MATERIAL	WT.
1	1	06-101665	DEFUELING HOSE, 1/2" x 25' LG.	Rubber	6.16
2	1	03-111395	QUICK DISCONNECT, 1/2"	Brass	.29

SPOKANE INDUSTRIES PO Box 3303 Spokane, WA. 99220 800-541-3601

Tolerance:except as noted
x/x= 1/8"
.xx= .03"
.xxx= .005"
ANG= 1

25' DE-PUDDLING HOSE

PN: 08-0024 | FIG. #18

Drawn: jay | Date:10/26/2005 | Size: A | Scale: NTS | Sheet 1 of 1

Confidential - Proprietary Information. Reproduction of these drawings or the manufacturing of products from these drawings for use by anyone other than Spokane Metal Products of Spokane, WA. is prohibited without written consent.

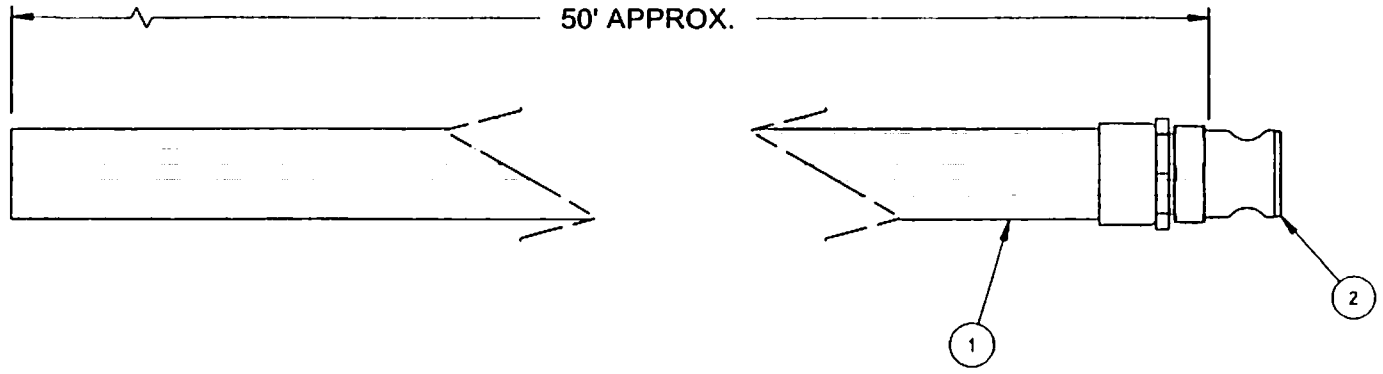

Parts List

ITEM	QTY	P.N.	DESCRIPTION	MATERIAL	WT.
1	1	06-10162	DEFUELING HOSE, 1 1/4" x 50' LG.	Rubber	30.92
2	1	04-10336	CAMLOCK ADAPTER, 1 1/4" F-NPT x 1 1/4" M-CL	Aluminum	.28

SPOKANE INDUSTRIES PO Box 3303 Spokane, WA 99220 800-541-3601

Tolerance:except as noted
x/x= 1/8"
.xx= .03"
.xxx= .005"
ANG= 1

1 1/4" DE-FUELING HOSE

PN: 06-10162 | FIG. #19

Drawn: jay | Date:10/26/2005 | Size: A | Scale: NTS | Sheet 1 of 1

Confidential - Proprietary Information. Reproduction of these drawings or the manufacturing of products from these drawings for use by anyone other than Spokane Metal Products of Spokane, WA. is prohibited without written consent.

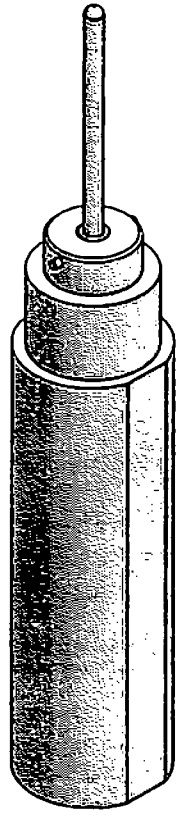

SPOKANE INDUSTRIES PO Box 3303 Spokane, WA. 99220 800-541-3601

Tolerance:except as noted x/x=± 1/8" .xx=± .03" .xxx=± .005" ANG=± 1°	PROBE ALIGNMENT TOOL			
	PN: 08-12020			FIG. #20
Drawn: jay	Date:12/1/2005	Size: A	Scale: NTS	Sheet 1 of 1

Confidential - Proprietary Information. Reproduction of these drawings or the manufacturing of products from these drawings for use by anyone other than Spokane Metal Products of Spokane, WA. is prohibited without written consent.